Vanguard 6840/6841
Installation Manual

Notice

©2008 Vanguard Networks
25 Forbes Blvd
Foxboro, MA 02035 USA
Phone: (508) 964 6200
Fax: (508) 543 0237
All rights reserved
Printed in U.S.A.

Restricted Rights Notification for U.S. Government Users

The software (including firmware) addressed in this manual is a "commercial item" as that term is defined in 48 C.F.R. 2.101, consisting of "commercial computer software" and "commercial computer software documentation" as such terms are used in 48 C.F.R. 12.212. Consistent with 48 C.F.R. 12.212 and 48 C.F.R. 227-7202-1 through 227-7202-4, and their successors as applicable, Customer will provide the Software and/or software documentation to U.S. Government End Users only pursuant to the terms and conditions therein.

Unpublished - rights reserved under the copyright laws of the United States.

Proprietary Material

Information and software in this document are proprietary to Vanguard Networks (or its Suppliers) and without the express prior permission of an officer of Vanguard Networks may not be copied, reproduced, disclosed to others, published, or used, in whole or in part, for any purpose other than that for which it is being made available. Use of software described in this document is subject to the terms and conditions of the Software License Agreement.

This document is for information purposes only and is subject to change without notice.

Radio Frequency Interference Regulations

This equipment has been tested and found to comply with the limits for a Class A digital device, pursuant to Part 15 of the FCC Rules. These limits are designed to provide reasonable protection against interference when the equipment is operated in a commercial environment. This equipment generates, uses, and can radiate radio frequency energy and, if not installed and used in accordance with the instruction manual, may cause harmful interference to radio communications.

Changes or modifications not expressly approved by Vanguard Networks could void the user's authority to operate the equipment.

This Class A digital apparatus meets all requirements of the Canadian Interference-Causing Equipment Regulations.

This is a Class A product. Operation of this equipment in a residential environment may cause radio interference, in which case the user may be required to take adequate measures to correct the interference at his/her own expense.

This product was verified under test conditions that included use of shielded DCE cable(s), and shielded Ethernet cables. Use of different cables will invalidate verification and increase the risk of causing interference to radio and TV reception.

You can obtain the proper cables from Vanguard Networks.

Telecommunications Regulations

Equipment that complies with Part 68 of the FCC rules includes a label or permanent marking on the printed circuit board that connects to the network that contains, among other information, the FCC registration number and ringer equivalence number (REN) for this equipment. If requested, this information must be provided to the telephone company. A plug and jack used to connect this equipment to the premises wiring and telephone network must comply with the applicable FCC Part 68 rules and requirements adopted by the ACTA.

The REN is used to determine the number of devices that may be connected to a telephone line. Excessive RENs on a telephone line may result in the devices not ringing in response to an incoming call. In most but not all areas, the sum of RENs should not exceed five (5.0). To be certain of the number of devices that may be connected to a line, as determined by the total RENs, contact the local telephone company. The REN for this product is part of the product identifier that has the format US:AAAEQ##TXXXX. The digits represented by ## are the REN without a decimal point (*e.g.*, 03 is a REN of 0.3).

If this equipment causes harm to the telephone network, the telephone company will notify you in advance that temporary discontinuance of service may be required. But if advance notice isn't practical, the telephone company will notify the customer as soon as possible. Also, you will be advised of your right to file a complaint with the FCC if you believe it is necessary. The telephone company may make changes in its facilities, equipment, operations or procedures that could affect the operation of the equipment. If this happens the telephone company will provide advance notice in order for you to make necessary modifications to maintain uninterrupted service. If the equipment is causing harm to the telephone network, the telephone company may request that you disconnect the equipment until the problem is resolved. Connection to party line service is subject to state tariffs. Contact the state public utility commission, public service commission or corporation commission for information. If your home has specially wired alarm equipment connected to the telephone line, ensure the installation of this equipment does not disable your alarm equipment. If you have questions about what will disable alarm equipment, consult a trained technician.

Equipment that meets the applicable Industry Canada Terminal Equipment Technical Specifications is conformed by the registration number. Equipment that complies with Industry rules includes a label or permanent marking on the printed circuit board that connects to the network. The abbreviation, IC, before the registration number signifies that the registration was performed based on a Declaration of Conformity indicating that Industry Canada technical specifications were met. It does not imply that Industry Canada approved the equipment.

Part No. T0287, Rev C
Publication Code: TK
Second Printing: July 2008

Manual is current for Release 7.3 of Vanguard Applications Ware

To comment on this manual, please send e-mail to vntechsupport@vanguardnetworks.com

Contents

Special Notices and Translations
Customer Information

Chapter 1.

About the Vanguard 6840/6841

Vanguard 6840/6841 Description 1-2
Features 1-3
Applications 1-6

Chapter 2.

Hardware Description

Enclosure 2-2
Motherboard 2-4
Vanguard Networks Daughtercards 2-6

Chapter 3.

Installation and Replacement

Checking Your Shipment Contents 3-2
Installing The Vanguard 6840/6841 3-3
  Installing the Standalone Version 3-4
  Installing the 6840/6841 Rack Mount Version 3-6
  Thermal Considerations 3-8
  Cabling Your Vanguard 6840/6841 3-9
Modifying Your Vanguard 6840/6841 3-19
  Accessing the Motherboard 3-20
  DIMM and Compact Flash 3-23
Installing/Removing the Lithium Battery 3-26

Chapter 4.

Powering Up Your Vanguard 6840/6841

Power Up Procedure 4-2
Warm and Cold Boot 4-3
Loading the Software 4-6

Appendix A.

Specifications

Contents (continued)

Appendix B.

Software License and Regulatory Information

FCC Part 68 and Telephone Company Procedures and Requirements for DSU, T1, and ISDN Interfaces B-2

Product Declarations and Regulatory Information B-4

Return Procedures

Index

Overview

Introduction

This installation describes features, hardware, specifications, and applications for the Vanguard 6840/6841.

Note

For information on operating system software and configuration, see the *Vanguard Basic Configuration Manual* (Part Number T0113).

Audience

This manual is intended for people who install and operate the Vanguard 6840/6841.

How to Use This Manual

The following table describes the contents of this manual:

This Chapter	*Description*
Chapter 1	Vanguard 6840/6841's hardware and software features.
Chapter 2	Description of the Vanguard 6840/6841 hardware features and components.
Chapter 3	Installing and replacing Vanguard 6840/6841 hardware including cards and motherboard.
Chapter 4	Powerup procedures and software loading.
Appendix A	Product specifications.
Appendix B	FCC and Telephone Company procedures and requirements.

Special Notices

The following notices emphasize certain information in the guide. Each serves a special purpose and is displayed in the format shown:

■Note

Note is used to emphasize any significant information.

Caution

Caution provides you with information that, if not followed, can result in damage to software, hardware, or data.

Warning

Warning is the most serious notice, indicating that you can be physically hurt.

Simplified Chinese

特别通告

以下通告强调指南中的某些信息。
每条信息均有一个特殊的目的并以如下格式显示:

■注解

注解用于强调任何重要的信息。

切记

切记提供您这类信息，如果不遵照信息的要求，可能导致软件、硬件或数据的损坏。

警告

警告是最严重的通告，表明您的身体可能被伤害。

Danish

Særlige overskrifter

Følgende overskrifter fremhæver nogle af oplysningerne i vejledningen. De tjener hvert et specifikt formål og vises i følgende format:

■Bemærk

Bemærk anvendes til at fremhæve vigtig information.

Forsigtig

Forsigtig understreger oplysninger, som, hvis de ikke bliver fulgt, kan føre til beskadigelse af software, hardware eller data.

Advarsel

Advarsel er den mest alvorlige overskrift, og tilkendegiver mulig personskade.

Dutch

Bijzondere vermeldingen

De volgende vermeldingen besteden extra aandacht aan bepaalde informatie in de handleiding. Elke vermelding heeft een eigen nut en wordt in de volgende opmaak weergegeven:

Opmerking
Een opmerking wordt gebruikt om belangrijke informatie te benadrukken.

Let op
Dit kopje geeft aan dat u de beschreven instructies moet volgen om schade aan de software, hardware of gegevens te vermijden.

Waarschuwing
Een waarschuwing is de belangrijkste vermelding. Indien u deze niet volgt, kan dit tot lichamelijke verwondingen leiden.

Finnish

Erityisilmoitukset

Seuraavat ilmoitukset korostavat tiettyjä oppaan tietoja. Kullakin on oma erikoistarkoituksensa ja ne esitetään seuraavassa muodossa:

Huomaa
Huomautusta käytetään korostamaan tärkeätä tietoa.

Vaara
Vaarailmoitus antaa tietoa, jonka huomiotta jättäminen voi johtaa ohjelmiston, laitteiston tai tietojen vahingoittumiseen.

Varoitus
Varoitus on kaikkein vakavin ilmoitus ja se kertoo mahdollisesta loukkaantumisriskistä.

French

Messages spéciaux

Les messages suivants mettent en valeur certaines informations dans le guide. Chacun d’eux remplit une fonction spéciale et est affiché dans le format indiqué :

Important
Important est utilisé pour souligner des informations critiques au sujet d’une procédure.

Mise en Garde
Une mise en garde vous fournit des informations qui, si elles ne sont pas observées, peuvent se traduire par des dommages pour le logiciel, le matériel ou les données.

Avertissement

Un avertissement constitue le message le plus sérieux, indiquant que vous pouvez subir des blessures corporelles.

German

Besondere Hinweise

Durch die folgenden Hinweise werden bestimmte Informationen in diesem Handbuch hervorgehoben. Jeder Hinweis dient einem bestimmten Zweck und wird im dargestellten Format angezeigt:

Wichtig
WICHTIG wird zur Betonung signifikanter Angaben zu Vorgehensweisen verwendet.

Vorsicht

Ein Vorsichtshinweis macht Sie darauf aufmerksam, daß Nichtbefolgung zu Software-, Hardware- oder Datenschäden führen kann.

Warnung

Eine Warnung weist Sie darauf hin, daß ernsthafte Körperverletzungsgefahr besteht.

Italian

Simboli speciali

I seguenti simboli, ciascuno con una speciale funzione, evidenziano determinate informazioni all'interno del manuale. Il formato è quello riportato qui di seguito.

Nota
Questo tipo di avvertimento viene utilizzato per evidenziare tutte le informazioni significative relative ad una procedura.

Attenzione

Questo tipo di avvertimento fornisce informazioni che, se non vengono seguite, possono provocare danni al software, all'hardware o ai dati.

Avvertenza

Questo tipo di avvertimento indica la presenza di condizioni di rischio che possono causare lesioni fisiche. Si tratta del simbolo più importante al quale prestare attenzione.

Japanese

特別表記

ガイド内では、以下の表記を使って特に注意する必要のある情報が提供されます。各表記にはそれぞれ目的があり、次の形式で表示されます。

■ 重要
重要な情報が記述されています。

注意

記述されている内容に従わない場合、ソフトウェア、ハードウェア、またはデータが壊れる可能性があります。

警告

最も重要な情報が記述されています。身体的な障害を被る可能性があります。

Korean

일러두기

이 설명서에는 사용자에게 특정한 내용을 강조하기 위해서 다음 내용이 포함되어 있습니다.

■참고
중요한 정보를 강조하는데 사용합니다.

주의

소프트웨어나 하드웨어, 또는 데이터를 손상시킬 수 있으므로 주의가 필요한 상황을 알립니다.

경고

사용자의 안전에 위험을 알리는 가장 심각한 수준의 경고입니다.

Norwegian

Spesielle merknader

Merknadstypene nedenfor representerer en bestemt type informasjon i håndboken. Hver merknadstype har en spesiell hensikt og vises på følgende format:

■**Merk**
Merk brukes for å fremheve viktig informasjon.

Forsiktig

Forsiktig gir deg informasjon om situasjoner som kan føre til skade på programvare, datamaskin eller data dersom den blir fulgt.

Advarsel

Advarsel er den mest alvorlige merknaden og indikerer at du kan bli fysisk skadet.

Portuguese/ Portugal

Avisos Especiais

Os avisos que se seguem realçam certas informações neste guia. Cada um deles serve um objectivo especial e é visualizado no formato apresentado:

Nota

Nota é utilizado para realçar qualquer informação importante.

Atenção

Atenção faculta-lhe informações que, se não forem cumpridas, poderão provocar danos no software, hardware ou nos dados.

Cuidado

Cuidado constitui o aviso mais grave, o qual indica que poderá ficar fisicamente ferido.

Spanish/Spain

Notificaciones especiales

Las siguientes notificaciones ponen énfasis sobre determinada información de la guía. Todas tienen un propósito especial y se muestran con el formato siguiente:

Nota

Las notas se utilizan para destacar determinada información de importancia.

Advertencia

Las advertencias le proporcionan información que debe seguirse, si no desea que el software, el hardware o los datos puedan verse dañados.

Aviso

Los avisos son las notificaciones de carácter más importante e indican la posibilidad de daños físicos para el usuario.

Swedish

Speciella beteckningar

Följande beteckningar betonar viss information i handboken. Var och en har ett speciellt syfte och visas i formatet nedan:

OBS!

OBS! används för att betona viktig information.

Viktigt

Viktigt ger dig information som, om den inte följs, kan resultera i skada i programvara, maskinvara eller data.

Varning

Varning är den mest allvarliga beteckningen och den indikerar att du kan skadas fysiskt.

Customer Information

Customer Questions

Customers who have questions about Vanguard Networks products or services should contact your Vanguard Networks representative or visit this website for product, sales, support, documentation, or training information:

http://www.vanguardnetworks.com/

Comments About This Manual

To help us improve our product documentation, please complete the comment card included with this manual and return it by fax to (508) 339-9592. If you prefer, provide your name, company, and telephone number, and someone in the documentation group will contact you to discuss your comments.

Customer Response Card

Vanguard Networks would like your help in improving its product documentation. Please complete and return this card by fax to (508) 339-9592; Attention: Product Documentaton, to provide your feedback.

To discuss comments with a member of the documentation group, provide telephone information at the bottom of this page. **Thank you** for your help.

Name _____

Company Name _____

Address _____

_____

_____

Document Title: Vanguard 6840/6841 Installation Manual

Part Number:

Please rate this document for usability:

☐ Excellent ☐ Good ☐ Average ☐ Below Average ☐ Poor

What did you like about the document? _____

_____

_____

_____

_____

What information, if any, is missing from the document? _____

_____

_____

_____

_____

Please identify any sections/concepts that are unclear or explained inadequately.

_____

_____

_____

_____

Cut Here

Additional comments/suggestions. _____

_____

_____

_____

_____

Telephone _____ Ext. _____ Best time to call_____

Chapter 1
About the Vanguard 6840/6841

Overview

Description

The Vanguard 6840/6841 products provide wide area network (WAN) access for offices that depend on efficiently consolidating legacy protocols (SNA/SDLC and BSC) with Voice and LAN traffic over IP, BGP, MPLS, VPN, Frame Relay, X.25, ISDN, and Nx64 T1/E1 Services. In brief, here is the difference between the Vanguard 6840 and 6841:

- Vanguard 6840: Supports two Async/Sync ports, two Async ports and two Ethernet ports, as well as up to four optional Vanguard Daughtercards.
- Vanguard 6841: Provides the functionality of the Vanguard 6840 plus it can support encryption.

Figure 1-1 shows the front panel of a Vanguard 6840/6841.

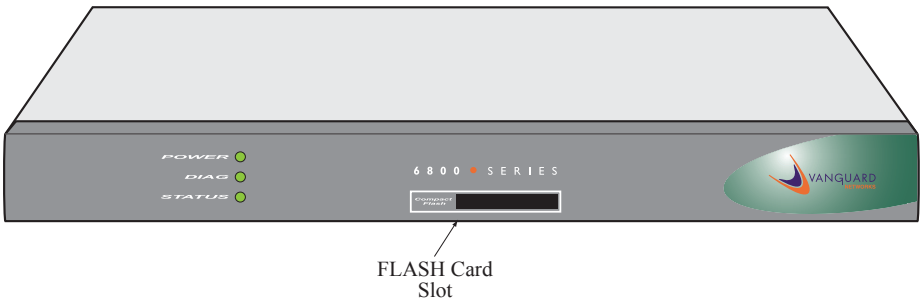

Figure 1-1. Vanguard 6840/6841 Front Panel

For a detailed description of the Vanguard 6840/6841 and its features, refer to the "Vanguard 6840/6841 Description" section on page 1-2 and the "Features" section on page 1-3.

For descriptions of the Vanguard 6840/6841 Daughtercards and other hardware components, refer to the appropriate sections in Chapter 2, Hardware Description.

Vanguard 6840/6841 Description

Introduction

The Vanguard 6840 and 6841 are flexible, RISC processor-based multiservice routers that provide increased performance and enhanced capability through high-speed interfaces for bandwidth-intensive LAN/WAN applications. They offer cost-effective, simultaneous support for voice, fax, video, and mixed protocol data traffic over IP, BGP, MPLS, VPN, Frame Relay, X.25, ISDN, ATM or Nx64 T1/E1 Services. The Vanguard 6840/6841 can be easily mounted in a 19-inch rack. They are SNMP-manageable and come with a variety of LAN, SNA, and IP networking features.

This section briefly describes the Vanguard 6840 and 6841.

Vanguard 6840 Description

The Vanguard 6840 is a multiservice router for medium to large offices that depend on efficiently consolidating serial protocols (such as SNA/SDLC, BSC) with LAN traffic over dedicated or switched services. Fax, Voice over Frame Relay and Voice over IP can be combined with data over dedicated or public Frame Relay links and still maintain excellent voice and video quality.

The Vanguard 6840 supports four Vanguard Daughtercard slots for voice, fax and mixed protocol data over dedicated or switched services.

It is ideally suited for hierarchical networks where customers need regional concentration of remote branch offices using analog or digital leased lines, IP, BGP, MPLS, Frame Relay, ISDN, X.25, and Nx64 T1/E1 services.

Vanguard 6841 Description

In addition to all the functionality of the Vanguard 6840, the Vanguard 6841 provides the following security features via Integrated Hardware Accelerated engine:

- IP Virtual Private Networks (VPN)
- VPN Tunneling: IPSec (IP traffic), GRE (non-IP traffic).
- IPSec Authentication Header (AH) and IPSec Encapsulating Security Payload (ESP)
- IPSec Encryption: DES (56 bit) and 3DES (168 bit).
- Advance Encryption Services (AES): 192, and 256 bit key length (PKI) and X.509v3 Digital Certificates
- Message Authentication through Complex Hashing Algorithms (MD5/SHA-1)
- Dynamic IP Address (Dynamic VPN Tunnels)

Features

Introduction

This section describes the features available with your Vanguard 6840/6841. For descriptions of the software running on your Vanguard 6840/6841, refer to the appropriate protocol document.

Hardware Features

This table lists the hardware features of the Vanguard 6840/6841:

Vanguard 6840/6841
Low profile enclosure with rear accessible motherboard, and support for: • Non Volatile Flash (8 Megabyte for Boot PROM Storage) • Compact Flash Memory Card (256 Megabyte with expansion capabilities) • Four daughtercards • SDRAM DIMM (256 Megabyte expandable to 1024 Megabyte) • *Future* - 60-channel Voice Server Module
Freescale MPC8270 PowerPC RISC processor.
Standard rear panel ports include: • Two Universal (V.11/X.21, V.24/RS232, V.35, or V.36) Sync/Async Ports (with DB-25 connectors) • Two Ethernet 10/100BaseT Auto-sensing ports • Two Async ports (RJ-45 connectors), one acts as the CTP
Vanguard 6841 Only
Integrated Hardware Accelerated Encryption

For additional information about the rear panel ports and the daughtercards, refer to appropriate section in Chapter 2, Hardware Description.

For information about the physical specifications of the Vanguard 6840/6841, refer to Appendix A, Specifications.

Daughtercards

You can purchase daughtercards to expand the capability of your Vanguard 6840 and Vanguard 6841.

Note

Additional cards may be supported with each software release. Check with your Vanguard Networks representative for the latest list.

Vanguard Networks Daughtercards

These standard Vanguard Network Daughtercards are currently supported by the Vanguard 6840 and Vanguard 6841:

- 56K DSU/CSU Daughtercard
- DIM (V.11/X.21, V.24/RS232, V.35, or V.36) Daughtercard
- ISDN BRI-U Daughtercard
- Enhanced ISDN BRI-S/T Data Daughtercard
- 2-Port Voice FXS Daughtercard
- Dual E&M Daughtercard
- 4-Port FXS Daughtercard
- 4-Port FXO Daughtercard
- FT1/FE1Daughtercard
- V.90 Modem Daughtercard (Future)
- ISDN BRI S/T Voice Daughtercard
- 2-Port Serial Data Card (V.11/X.21, V.24/RS232, V.35, or V.36) Daughtercard

Note

Vanguard 6840/6841 supports a maximum of three (3) 2-Port Serial Data Cards (2P-SDC) in slots 4, 3, and/or 1. The recommended order of installation is as follows:

One 2P-SDC should go into Slot 4.

Two 2P-SDCs should go into Slots 4 and 3.

Three 2P-SDCs should go into Slots 4, 3, and 1.

If there is a 2P-SDC in Slot 1, then Slot 2 can only be used for a FT1 Daughtercard, or a FE1 Daughtercard, or a BRI-Data Daughtercard.

For additional information about these cards, refer to the “Vanguard Networks Daughtercards” section in Chapter 2. For detailed information about installing the Vanguard Daughtercards refer to the Vanguard *Daughtercard Installation Guide* (Part Number T0020).

Non-Supported Daughtercards

These Vanguard Network Daughtercards are currently *not supported* by the Vanguard 6840 and Vanguard 6841:

- RemoteVu Daughtercard
- V.34 Modem Daughtercard
- G.SHDSL Daughtercard
- *Old Style* BRI S/T Data Daughtercard
- 6435/6455 Enhanced Daughtercards

Software Support

The Vanguard 6840/6841 requires Release 6.5.P30A or greater software.

You can obtain Applications Ware Packages that can be tailored to your specific needs. Vanguard Networks Applications Ware packages are divided into licenses available for Vanguard Networks products. These licenses include the following packages:

- IP+
- SNA+
- Multiservice

Optional licenses include:

- Security
- Voice
- AS400/BSC
- Premium Voice
- Advanced Voice (future)

For details about the contents of the license upgrade packages and how they can be obtained, refer to the latest *Software Release Notice*.

Note

A license refers to both a legal document that allows you to use features and to the software that contains those features.

Applications

Introduction

This section describes a couple of typical applications for the Vanguard 6840/6841:

- Large Multi-service Branch Offices VPN tunnels, Encryption requirements, QoS for IP traffic & multiprotocol voice, legacy data
- Central site VPN concentrator for smaller size networks (20-50 sites) and voice concentrator. S

Large & Multi-Service Branch Bank Offices

Vanguard Networks VPN software has the flexibility to support different types of IP-VPN networks including IP/MPLS and the Internet, as illustrated in Figure 1-2. Deployment of protocols like BGP-4 and IPSec also ensure interoperability with other carrier networks. IPSec-based VPNs have been deployed by many enterprises for secure remote access and site-to-site communications among internal enterprise sites. Network-based IP VPNs are a growing choice for medium size enterprises that want to connect branch office locations with a secure, robust, IP based solution.

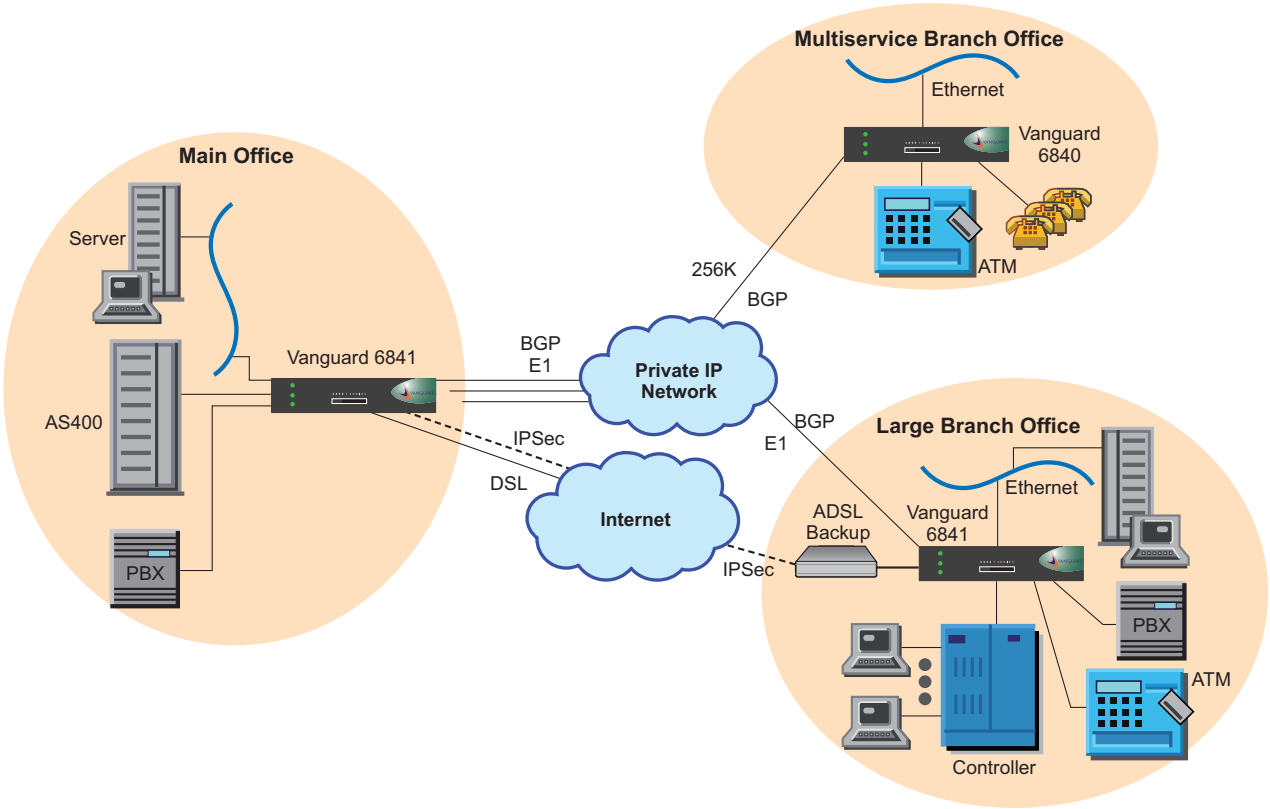

Figure 1-2. Large and Multi-Service Branch Bank Offices Application

The large & multi-service branch bank office and VPN, Multi-protocol VPN network requirements include:

- One or two 10/100BaseT Ethernet ports
- 3DES/AES Hardware encryption, PKI
- Firewall
- QoS & BGP-4 requirement
- Support for existing daughter cards
- Support for FXO, FXS, Serial ports, Voice Services, T1/E1 Voice card, and ISDN BRI
- Support for multiple Serial ports

VPN Regional Concentrator

Convergence of voice and data over packet switched IP, MPLS, or Frame Relay networks will continue to be an important focus of enterprise network infrastructure. As new real-time IP-based voice, video and messaging applications emerge and evolve, it will be necessary and crucial for branch office router networks to support high voice quality, low latency and QoS to ensure that these real-time applications have sufficient network bandwidth and resources. As illustrated in Figure 1-3, the convergence of voice and data, a true multi-service branch office router like the Vanguard 6840/41 will be able to support the applications of today and tomorrow without compromising performance, latency, cost or operational flexibility.

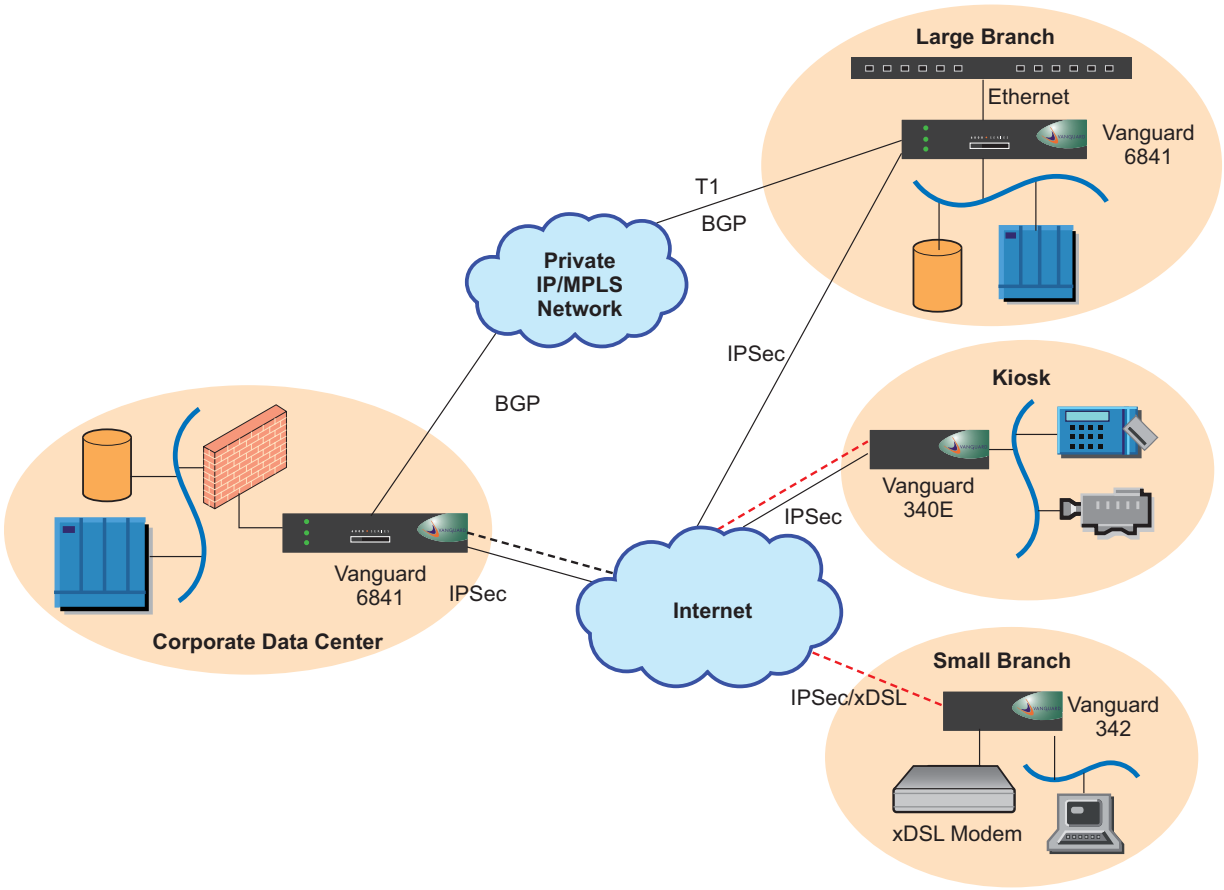

Figure 1-3. VPN Regional Concentrator Network

The regional concentrator network requirements include:

- One or two 10/100 Ethernet ports
- 3DES/AES Hardware encryption, PKI
- Firewall
- QoS & BGP-4 requirement (Dual-Homed BGP IP/MPLS VPNs to Large Branch)
- Support for FXO, FXS, Serial ports, Voice Services, T1/E1 Voice card, 4-port ISDN BRI

Chapter 2
Hardware Description

Overview

Introduction

This chapter describes the Vanguard 6840 and Vanguard 6841 and the hardware components that make up the devices.

- Vanguard 6840/6841 enclosures and standard hardware components
- Daughtercards

Enclosure

Introduction

This section describes the following:

- Vanguard 6840/6841 enclosures
- Motherboard
- Front panel
- Rear panel

Enclosure

The Vanguard 6840/6841 fits into a low profile enclosure that can be used on a desktop or mounted into a standard 19-inch equipment rack. The Vanguard 6840/6841 enclosure contains a 110/220 Vac power supply with the power switch and receptacle on the rear panel.

The enclosures contains a motherboard and (optional) daughtercards.

Front Panel

Figure 2-1 shows Vanguard 6840/6841 front panel.

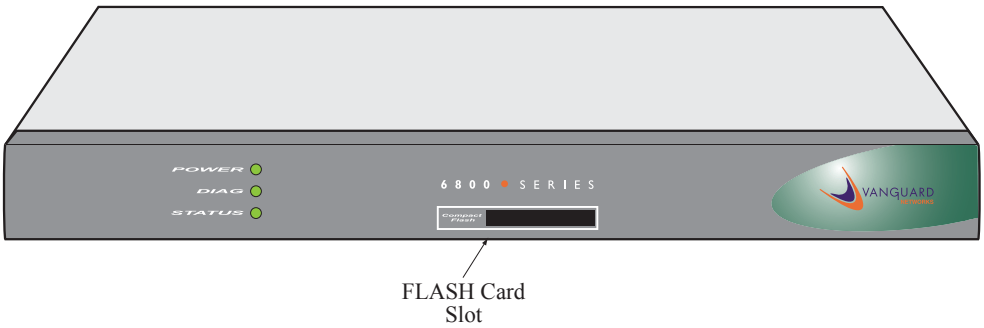

Figure 2-1. Vanguard 6840/6841 Front Panel

Rear Panel

Figure 2-2 shows a Vanguard 6840/6841 rear panel. The rear panel contains following:

- Two Sync/Async Universal ports (DB-25 connectors) which require a Cable Adapter for high speed use (See “Cable Adapters and Special Cables” section on page 3-10)
- Two Async ports (RJ-45 connector), one acts as the CTP
- Two Ethernet ports (with 10/100BaseT Auto-sensing)
- Power Switch and Receptacle

The figure also shows locations for four daughtercards:

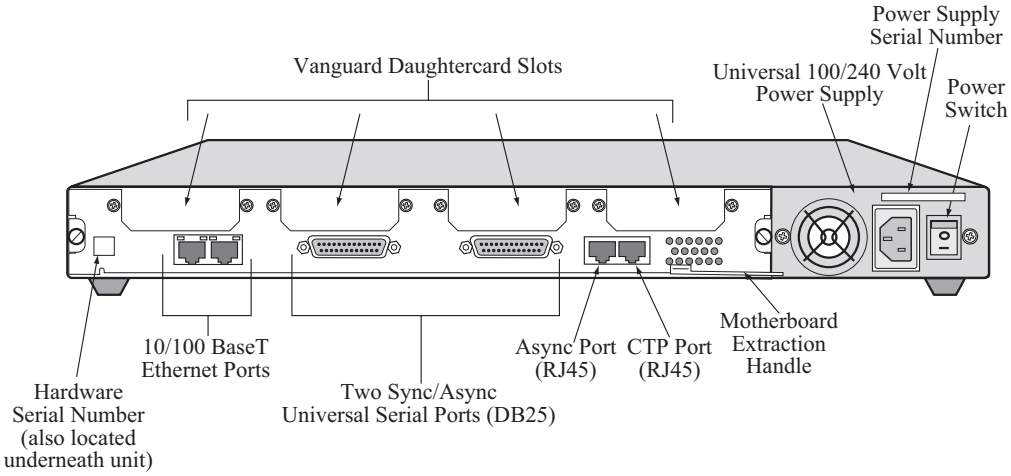

Figure 2-2. Vanguard 6840/6841 Rear Panel

Figure 2-3 shows the port number on the Vanguard 6840/6841 rear panel.

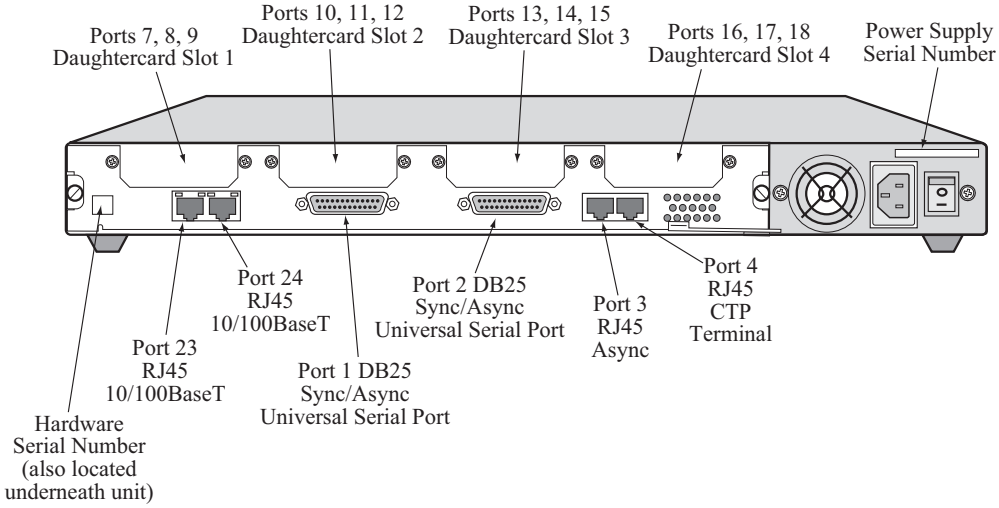

Figure 2-3. Vanguard 6840/6841 Rear Panel Port Numbers

■Note

For information about port numbering and cabling, refer to the "Cabling Your Vanguard 6840/6841" section in Chapter 3.

Caution

Do not connect Ports 3, 4, 23 or 24 to the Public Communications Network.

Serial Numbers

There are two hardware serial number labels on the Vanguard 6840/6841. One is located on the rear panel and the other is located on the underside of the unit.

Refer to the serial number when contacting your Vanguard Networks Service Representatives.

Motherboard

General Description

The Vanguard 6840/6841 motherboard contains:

- 8 Mbytes Flash (for Boot PROM Code)
- 256 Mbytes of SDRAM (synchronous DRAM) on an attached DIMM (expandable to 1024 Mbytes of SDRAM)
- Two integrated 10/100BaseT auto-sensing Ethernet ports, enabling migration to high speed broadband services as well as simultaneous LAN/WAN access
- Two integrated universal serial ports (software configurable V.11/X.21, V.24/RS232, V.35, or V.36), allowing connectivity to nearly all legacy protocols
- Two Async ports (RJ-45 connector), one is for CTP access
- Compact Flash Memory Card connector
- Voice Module connector (future)
- Battery for Real Time clock
- Four expandable daughtercard combinations (see “Daughtercards” section on page 2-5)
- Integrated standards-based 3DES/AES hardware-accelerated encryption processing for maximum security of IP/VPN solutions over public Internet **(6841 only)**

There is a battery which provides power for the unit’s real time clock.

Figure 2-4 shows the location of the motherboard components.

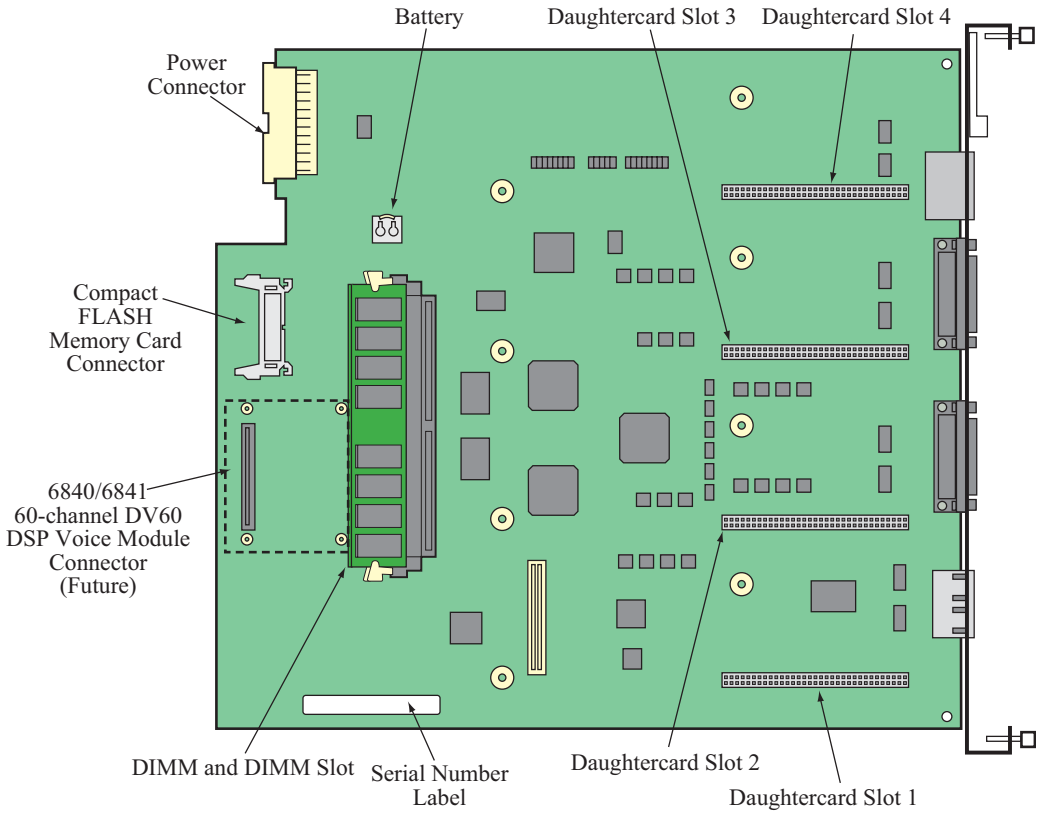

Figure 2-4. Vanguard 6840/6841 Motherboard

Access the Motherboard

To access the motherboard components you must remove the motherboard from the enclosure.

- For information about removing and installing the motherboard refer to the "Accessing the Motherboard" section in Chapter 3.
- For information about removing or installing motherboard components, refer to the "Modifying Your Vanguard 6840/6841" section in Chapter 3.

Daughtercards

The Vanguard 6840/6841 can support up to four of these standard Vanguard Networks Daughtercards:

- 56K DSU/CSU Daughtercard
- DIM (V.11/X.21, V.24/RS232, V.35, or V.36) Daughtercard
- ISDN BRI-U Daughtercard
- Enhanced ISDN BRI S/T Daughtercard
- 2-Port Voice FXS Daughtercard
- 4-Port Voice FXS Daughtercard
- 4-Port Voice FXO Daughtercard
- Dual E&M Daughtercard
- FT1/FE1 Daughtercard
- V.90 Modem Daughtercard (future)
- ISDN BRI S/T Daughtercard
- 2-Port Serial Data Card (V.11/X.21, V.24/RS232, V.35, or V.36) Daughtercard

Note

Vanguard 6840/6841 supports a maximum of three (3) 2-Port Serial Data Cards (2P-SDC) in slots 4, 3, and/or 1. The recommended order of installation is as follows:

One 2P-SDC should go into Slot 4.

Two 2P-SDCs should go into Slots 4 and 3.

Three 2P-SDCs should go into Slots 4, 3, and 1.

If there is a 2P-SDC in Slot 1, then Slot 2 can only be used for a FT1 Daughtercard, or a FE1 Daughtercard, or a BRI-Data Daughtercard.

DIMM

The motherboard has a slot for a single SDRAM DIMM. The Vanguard 6840/6841 comes standard with a 256 Mbytes SDRAM DIMM (expandable to 1024 Mbytes).

Vanguard Networks Daughtercards

Daughtercards

The Vanguard 6840/6841 can support up to four of these standard Vanguard Networks Daughtercards:

- 56K DSU/CSU Daughtercard
- DIM (V.11/X.21, V.24/RS232, V.35, or V.36) Daughtercard
- ISDN BRI-U Daughtercard
- Enhanced ISDN BRI S/T Daughtercard
- 2-Port Voice FXS Daughtercard
- 4-Port Voice FXS Daughtercard
- 4-Port Voice FXO Daughtercard
- Dual E&M Daughtercard
- FT1/FE1 Daughtercard
- V.90 Modem Daughtercard (future)
- ISDN BRI S/T Daughtercard
- 2-Port Serial Data Card (V.11/X.21, V.24/RS232, V.35, or V.36) Daughtercard

Note

Vanguard 6840/6841 supports a maximum of three (3) 2-Port Serial Data Cards (2P-SDC) in slots 4, 3, and/or 1. The recommended order of installation is as follows:

One 2P-SDC should go into Slot 4.

Two 2P-SDCs should go into Slots 4 and 3.

Three 2P-SDCs should go into Slots 4, 3, and 1.

If there is a 2P-SDC in Slot 1, then Slot 2 can only be used for a FT1 Daughtercard, or a FE1 Daughtercard, or a BRI-Data Daughtercard.

This section briefly describes these cards.

For instructions for installing these cards, refer to the *Vanguard Daughtercard Installation Guide* (Part Number T0020).

Daughtercard Compatibility

Older Vanguard Networks Daughtercards do not fit into the Vanguard 6840/6841. You can only use the newer daughtercards which are identified by a dimple as shown in Figure 2-5. If the dimple is not present, do not attempt to use the Daughtercard in the Vanguard 6840/6841.

Also, when installing a Vanguard Networks Daughtercard into a 6840/6841, you must use the shorter two-sided header. The taller header is used with other Vanguard Networks units.

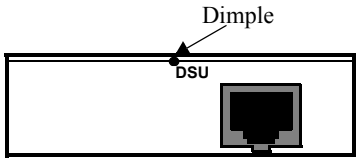

Figure 2-5. New Vanguard 6840/6841 Daughtercard Example

Caution

If you attempt to force an older Vanguard Networks Daughtercard into a Vanguard 6840/6841, the equipment will be damaged.

If you have an older Vanguard Networks Daughtercard and would like to use it in a Vanguard 6840/6841, contact your service representative about having the card reworked.

DIM Daughtercard

This card supports a single V.11/X.21, V.24/RS232, V.35, or V.36 DIM (Digital Interface Module) and can be set as either a DTE or DCE.

Figure 2-6 shows the DIM Daughtercard connector as it appears on the back panel.

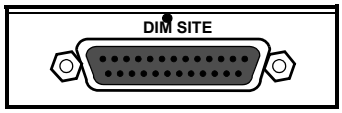

Figure 2-6. DIM Daughtercard Connector

56K DSU/CSU Daughtercard

The DSU Daughtercard provides an RJ48S connector and can support speeds of 56 kbps (synchronous). It conforms to AT&T 62310 point-to-point and multipoint, and to ANSI T1/E1.4/91-006 56 kbps. The card supports the following capabilities:

- Internal/external clocking
- Internal/external loopback
- 4-wire line driver operation

The card also supports multidrop DSUs when either of these conditions exist:

- If a MARK Idle protocol is used (such as MX25).
- If the Telco uses an OR'ed or Data Contention is used to mix individual DRU drops.

Figure 2-7 shows the 56K DSU/CSU Daughtercard connector as it appears on the back panel.

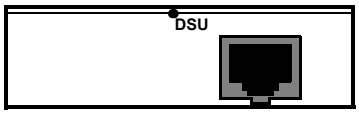

Figure 2-7. 56K DSU/CSU Daughtercard Connector

ISDN BRI-U Daughtercard

This card provides 2B+D Channel through an ISDN BRI U interface. It conforms to ANSI T1.601 1992 (2B1Q), is LAPD:ITU Q.921 compliant, and supports the following:

- Integral X.31
- Q.931 dial support
- NI1, 5ESS, DMS-100 switch types
- D Channel Packet Mode
- Leased Circuit Services (I Interface)
- Japan High-Speed Digital

Figure 2-8 shows the ISDN BRI-U Daughtercard connector as it appears on the back panel.

Figure 2-8. ISDN BRI-U Daughtercard Connector

Enhanced ISDN BRI-S/T Daughtercard

This card provides 2B+D Channel through a BRI S/T interface. It conforms to ITU I.430, is LAPD:ITU Q.921 compliant, and supports:

- Integral X.31
- Q.931 dial support
- NI1, 5ESS, DMS-100, ETSI, Euro Numeris switch types
- D Channel Packet Mode
- Leased Circuit Services (I Interface)
- Permanent B for German Monopol support or Japan High-Speed Digital

Figure 2-9 shows the ISDN BRI-S/T Daughtercard connectors as they appear on the back panel.

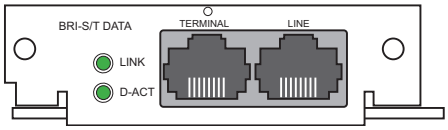

Figure 2-9. Enhanced BRI-S/T Daughtercard Connectors

■Note

Termination options for the enhanced ISDN BRI ST data Daughtercards are set in the Configure menu, and are not controlled by switches. For more information, refer to the *Vanguard Integrated Services Digital Network: ISDN Manual* (Part Number T0103-06).

ISDN BRI Voice Daughtercard

This card provides 2B+D Channel through a BRI S/T interface. It conforms to ITU I.430, is LAPD:ITU Q.921 compliant, and supports:

- Integral X.31
- ITU-T Q.931 (EURO IDSN) - ETSI switch type to connect to PBXs and

public networks.

- ECMA 143 - QSIG Basic Service to connect to PBXs over private line.
- ECMA 165 - QSIG Generic Functions for Support of PBX Supplementary Services.
- ITU-T G.711A (A-law) and G.711U (μ-law) interface voice encoding.
- ITU-T G.723, G729, and Vanguard Networks proprietary CVSELP packet voice compression.

Figure 2-10 shows the ISDN BRI Voice Daughtercard connectors as they appear on the back panel.

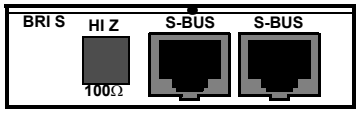

Figure 2-10. ISDN BRI Voice Daughtercard Connectors

2-Port Voice FXS Daughtercard

The 2-Port Voice FXS Daughtercard has two RJ11 connectors for two FXS Ports. The two ports can be used simultaneously and each port supports one voice channel.

Figure 2-11 shows the 2 Port Voice FXS Daughtercard connectors as they appear on the back panel.

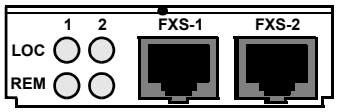

Figure 2-11. 2-Port Voice FXS Daughtercard Connectors

4-Port Voice FXS Daughtercard

The Vanguard Quad FXS Daughter Card is supported on the Vanguard 6840 and 6841. The 4-Port Voice FXS Daughtercard has four RJ11 connectors for four FXS Ports.

Figure 2-12 shows the 4-Port Voice FXS Daughtercard connectors as they appear on the back panel.

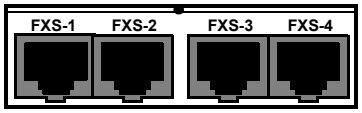

Figure 2-12. FXS Daughtercard

4-Port Voice FXO Daughtercard

The Vanguard Quad FXO Daughter Card is supported on the Vanguard 6840 and 6841. The 4-Port Voice FXO Daughtercard has four RJ11 connectors for four FXO Ports.

Figure 2-13 shows the 4-Port Voice FXO Daughtercard connectors as they appear on the back panel.

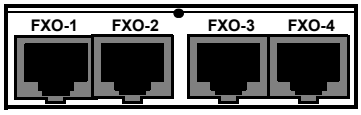

Figure 2-13. FXO Daughtercard

FT1/FE1 Daughtercards

The FT1/FE1 Daughtercards allow a Vanguard 6840/6841 to transfer data over a T1 or E1 network. The daughtercards support full and fractional, channelized, T1 or E1, and PRI ISDN speeds.

- The FE1 Daughtercard provides line rates 2.048 Mbps and data rates of n x 64 kbps (where n is 1 to 31) per channel.
- The FT1 Daughtercard provides line rates 1.544 Mbps and data rates of n x 56 kbps (where n is 1 to 24) per channel.

Figure 2-14 shows the FT1 and the FE1 Daughtercard connectors as they appear on the back panels. The FT1 Daughtercard has a single RJ48C connector while the FE1 Daughtercard has two BNC connectors along with one RJ48C connector.

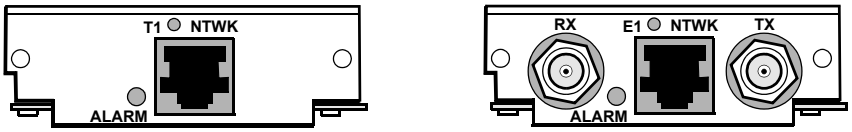

Figure 2-14. FT1 and FE1 Daughtercard Connectors

■Note

The FE1 Daughtercard comes with this label which specifies that the E1 interface complies with the Australian requirements ACA TS 016 - 1997 for connection to E1 SELV services. Also the E1 interface meets the IEC950 specifications for TNV1.

Dual E&M Daughtercard

The Dual E&M Daughtercard has two E&M interfaces. The ports use RJ11 connectors.

Figure 2-15 shows the Dual E&M Daughtercard connectors as they appear on the back panel.

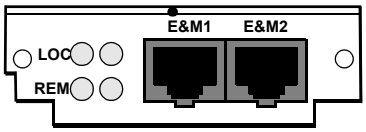

Figure 2-15. Dual E&M Daughtercard Connectors

V.90 Modem Daughtercard

The V.90 modem daughtercard provides Async PPP dial back-up for a customers' applications or can be used for Async dial connections such as remote CTP access. The V.90 uses a dual RJ-11 for connection to central offices, PBXs or telephone systems. V.90 is designed for the Vanguard 6840 and 6841.

Figure 2-16 shows the rear panel connectors on the V.90 modem daughtercard. For installation instructions, refer to the *Vanguard Daughtercard Installation Guide* (Part Number T0020).

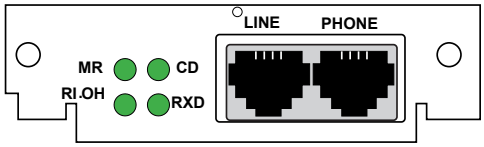

Figure 2-16. V.90 Modem Daughtercard Connectors

2-Port Serial Data Card

The 2-Port serial data card has two Sync/Async Universal Serial DCE ports (V.11/X.21, V.24/RS232, V.35, or V.36). These ports are independent of each other and require a Y-cable which provides two DB25 ports. The required Y-cable is supplied with the card or can be ordered separately.

Note

A cable adapter is required to use current Vanguard Networks Adapter Cables when running V.11/X.21, V.35, or V.36. (See "Cable Adapters and Special Cables" section on page 3-10)

To emulate a DTE port, the special cables listed below are also required.

- For V.11/X.21, use 51176 DCE-DTE cable adapter and 1152-10022 V.11/X.21 cable adapter
- For V.24/RS232, use 80110 (or equivalent)
- For V.35 or V.36, use 51177 DCE-DTE cable adapter and 1152-10021 V.35/V36 cable adapter

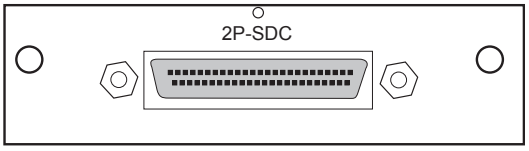

Figure 2-17. 2-Port Serial Daughtercard Connector

Chapter 3
Installation and Replacement

Overview

Introduction

This chapter provides instructions for the following tasks:

- Installing a Vanguard 6840/6841.
- Modifying your unit.
- Installing and replacing the battery.

Checking Your Shipment Contents

List of Contents

Before you install the Vanguard 6840/6841, make sure your shipment contents are complete.

The Vanguard 6840/6841 is packaged in shock-absorbent packing material. Inside your shipping carton, you should find the contents shown in Figure 3-1.

Vanguard 6840/6841 Shipping Contents

- Vanguard 6840/6841 enclosure
- Compact Flash Memory Card

Note

Compact Flash Memory is packaged separately. Do not discard.

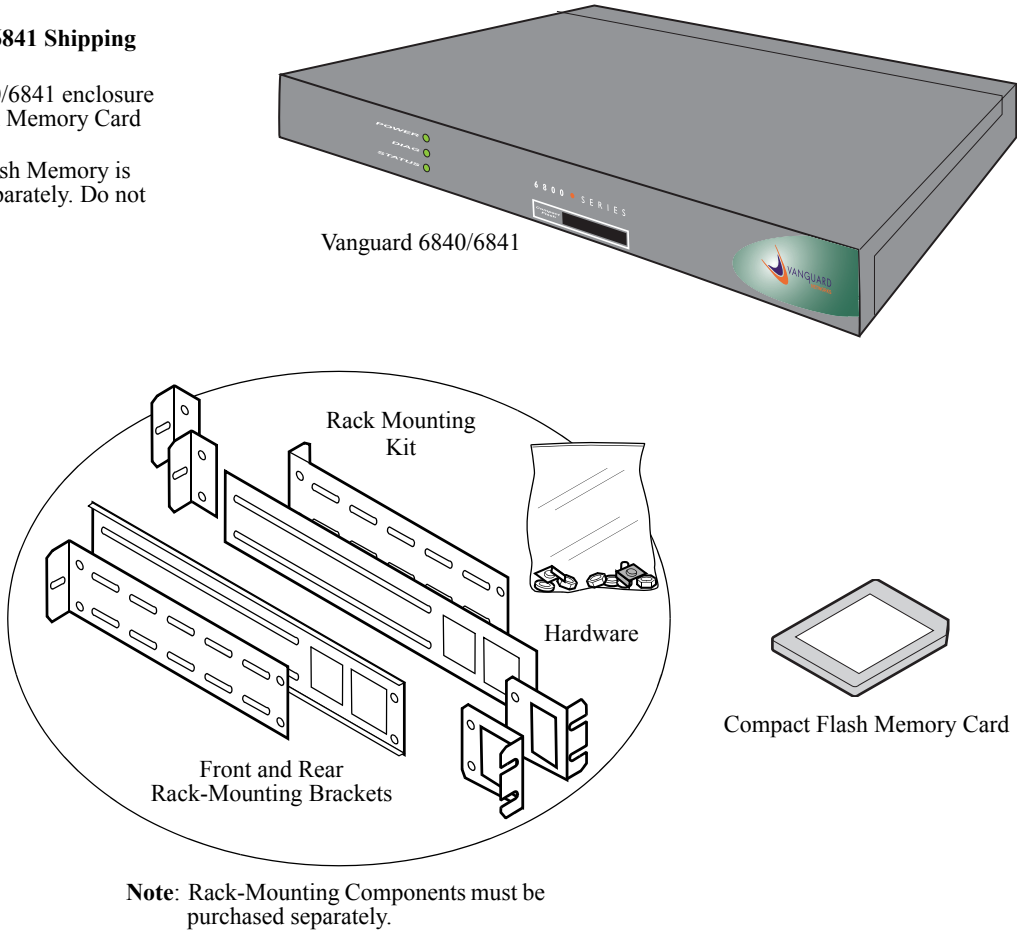

Note: Rack-Mounting Components must be purchased separately.

Figure 3-1. Vanguard 6840/6841 Shipping Contents

Installing The Vanguard 6840/6841

Introduction

This section explains how to install the Vanguard 6840/6841. It consists of these sections:

- Selecting and preparing the installation site.
- Standalone installation.
- Rack mount Installation.
- Thermal considerations.
- Cabling.

After the Vanguard 6840/6841 is installed and cabled, go to Chapter 4, Powering Up Your Vanguard 6840/6841 for instructions for powering-up the unit.

Installing the Standalone Version

How to Choose a Site

Before you install a standalone version of the Vanguard 6840/6841, select a site for the device.

Choose a site that is within an appropriate distance of a power source. Depending on your application, and the country in which the Vanguard 6840/6841 is to operate, the power source must be a grounded 110 to 220 Vac outlet.

Leave at least 2 inches (5 cm) of clearance in front of the front panel, to allow you to see the front panel LEDs, and 6-inches behind the unit for cable clearances (see Figure 3-2). For proper ventilation, leave 2 inches (5 cm) of clearance on the sides.

The site should be free of accumulated dust and environmental extremes. Refer to Appendix A, Specifications for details.

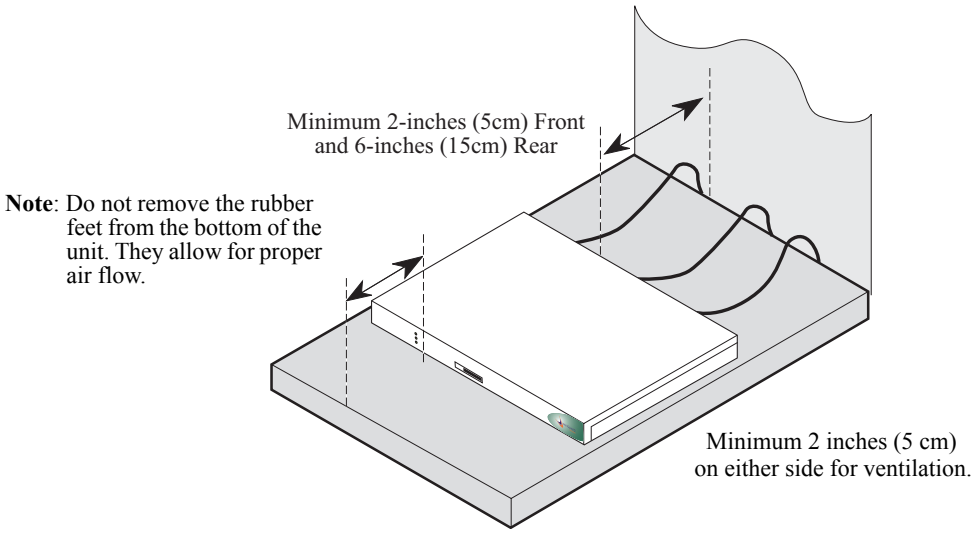

Figure 3-2. Proper Cable and Air Clearance

Caution

Vanguard 6840/6841 devices should be used in environments designed for computers and electronic equipment. In areas susceptible to lightning, take precautions to prevent damage to electronic equipment. Contact your telephone company or an electronic accessories vendor for information on lightning protection equipment. Customers experiencing problems caused by surges from lightning have eliminated such problems by installing appropriate surge suppressors on power and data lines.

Installation

Complete these steps to install the stand-alone version:

Step	Action
1	Unpack the Vanguard 6840/6841, and inspect the unit to ensure you have all the components.
2	Install any daughtercards that you need to add to the unit, as necessary.
3	Install Compact Flash Memory Card (see Figure 3-13).
4	Be sure that the five rubber feet are on the bottom of the enclosure.
5	Attach the power cord and cables to the rear panel. Refer to the "Cabling Your Vanguard 6840/6841" section on page 3-9 for cabling information. **■Note** Cable Adapters are required when installing the Vanguard 6840/6841 into an existing site that already has Vanguard Networks high-speed (V.11/X.21, V.35, or V.36) Adapter Cables. (See "Cable Adapters and Special Cables" section on page 3-10)
6	Place the enclosure in the selected site, and power unit on. Do not block the fan inlet or outlet vents.
7	Ensure that the ambient temperature at the fan inlet is within the temperature range specified in Appendix A.

■Note

You can stack as many as four Vanguard 6840/6841 units on top of each other.

Caution

Do not place items weighing more than 20 pounds (9 kg) on top of a Vanguard 6840/6841 enclosure.

Installing the 6840/6841 Rack Mount Version

Introduction

This section explains how to install the rack mount version of the Vanguard 6840/6841.

Installation Variation

When rack-mounting a Vanguard 6840/6841, you can orient the unit in either of two ways:

- Front Panel Forward: The front panel faces the front of the rack. This allows you to easily see the LEDs. The cables run out the rear of the rack.
- Rear Panel Forward: The rear panel faces the front of the rack. This allows you to easily access the cables and to replace and install the motherboard and cards.

For either mounting method, refer to Figure 3-3.

Rack-Mount Cautions

Take note of these considerations before and after rack-mounting your Vanguard 6840/6841.

Caution

It is possible to subject the rack-mounted Vanguard 6840/6841 to high temperatures. Be sure the ambient temperature in the equipment rack and around the inlets of the cards and power supply does not exceed the recommended temperature limits listed in Appendix A.

Caution

Be sure that the rack-mounted Vanguard 6840/6841 has adequate air flow for cooling purposes. Leave a minimum of 2 inch (5 cm) clearance on each side. (Inadequate airflow can cause thermal shutdown of the power supply.)

Caution

When mounting a Vanguard 6840/6841 in a rack, be sure the mounting screws are adequately tightened so the enclosure does not bend or fall.

Caution

Be sure that the power circuit to which the Vanguard 6840/6841 is connected is not overloaded.

Caution

Be sure that the rack-mounted Vanguard 6840/6841 is properly grounded at all times.

Installation

Figure 3-3 explains how to install a Vanguard 6840/6841 into an equipment rack.

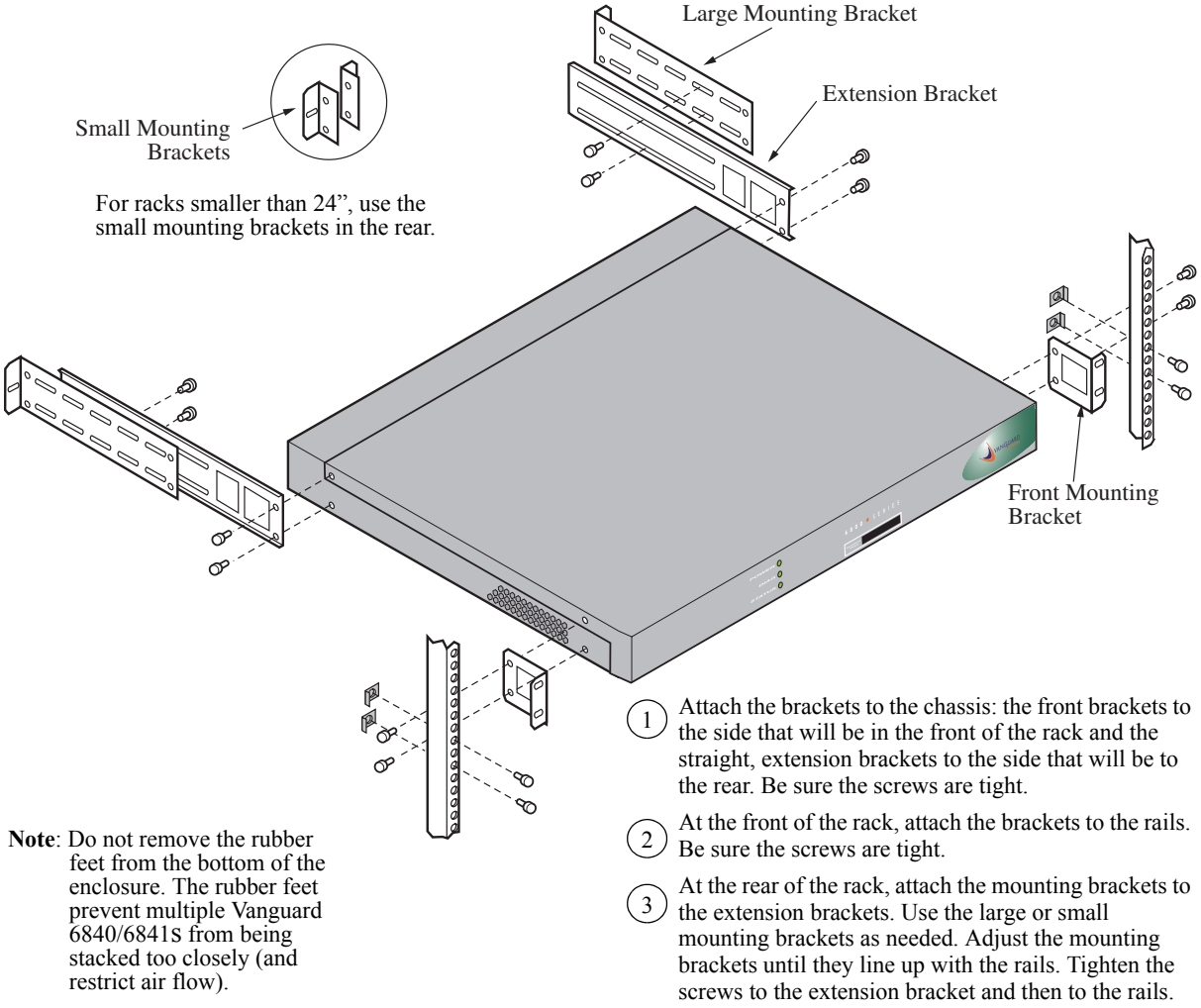

Figure 3-3. Installing the Vanguard 6840/6841 Into a Rack

Thermal Considerations

Introduction

This section explains some of the heat and temperature factors that can affect your Vanguard 6840/6841.

Inlet Temperature

After the unit is running, check the ambient air temperature. Make sure it does not exceed the operating temperature limits specified in Appendix A.

Auto-speed Fan

The Vanguard 6840/6841 contains an Auto-speed fan to maintain proper cooling. The fan automatically slows down or speeds up depending on the internal temperature.

Other conditions that could impact internal temperature of the Vanguard 6840/6841 include:

- Blocked vents
- Insufficient clearance around the unit
- Air inlet temperatures exceeds the operating limits
- The feet must be installed to allow for clearance and proper air flow

Cabling Your Vanguard 6840/6841

Introduction

This section provides information to help you cable your Vanguard 6840/6841.

Caution

Before connecting cables to the motherboard or daughtercard ports (ports 1 to 18), be sure that the screws holding the motherboard in place are tight. If the screws are loose, the motherboard could loosen under the weight of the cables and cause damage to the equipment. Also use proper cable strain relief to prevent damage due to excessive cable weight.

Rear Panel Port Numbering

Figure 3-4 shows the port number on the Vanguard 6840/6841 rear panel.

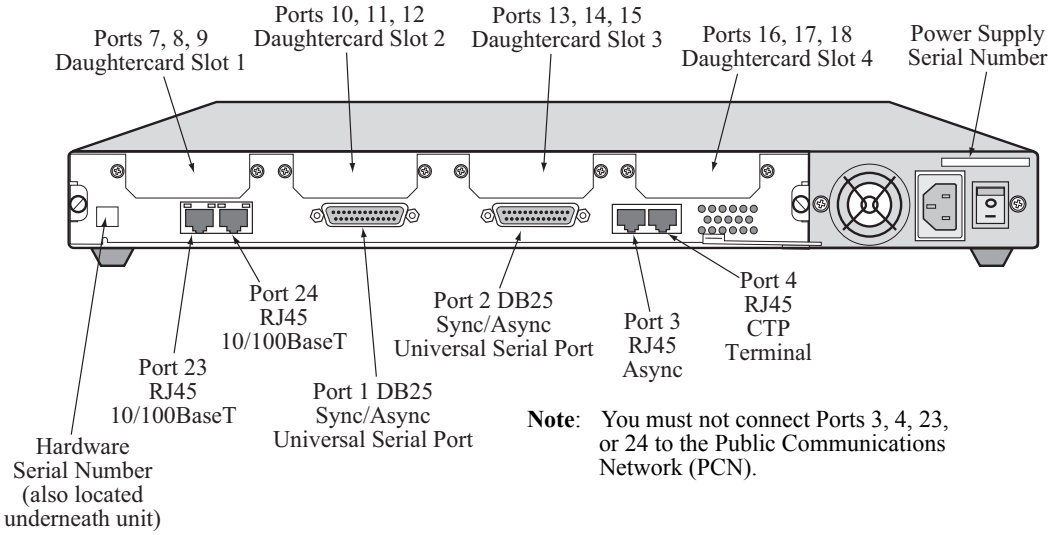

Figure 3-4. Vanguard 6840/6841 Rear Panel Port Numbers

Caution

Do not connect the Ports 3, 4, 23, or 24 to the Public Communications Network.

■Note

When installing a daughtercard with only one port, the port number is 7, 10, 13, or 16 (depending on the location of the card).

Rear Panel Ports

There are six physical ports on the Vanguard 6840/6841 rear panel.

Ports 1 and 2

Ports 1 and 2 are Sync/Async Universal Serial Ports (DB25 connectors). Depending on the configuration, these ports can support V.11/X.21, V24/RS232, V.35 and V.36 DCE.

■Note

Cable Adapters are required when using V.11/X.21, V.35, or V.36.

Cable Adapters and Special Cables

To emulate a high speed DTE interface V.11/X.21, V.35, or V.36 on any 6840/6841 Universal Serial Port requires the use of a Cable Adapter (Figure 3-5) and special cables.

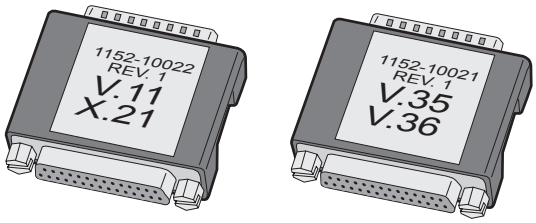

Figure 3-5. Cable Adapters

Refer to the table below for the 6840/6841 serial port configuration rules.

6840/6841 Serial Port Configuration Rules

Motherboard Port 1	Motherboard Port 2	Slot 1	Slot 2	Slot 3	Slot 4	Total Serial Ports
UDIM	UDIM	2P-SDC	INVALID	2P-SDC	2P-SDC	8
UDIM	UDIM	DIM DC	DIM DC	2P-SDC	2P-SDC	8
UDIM	UDIM	DIM DC	DIM DC	DIM DC	2P-SDC	7
UDIM	UDIM	DIM DC	DIM DC	DIM DC	DIM DC	6

KEY: UDIM = Universal DIM, 2P-SDC = 2-Port Serial Data Card, DIM DC = DIM Site Daughtercard, INVALID = Cannot use for Serial Card

Refer to the table below for a description with part numbers of the Cable Adapter and special cables and to Figure 3-6 for a cable application example.

■Note

Each row in the table specifies the required EIA serial cables to connect the various configurations.

2-Port Serial Data Card product code 1130-10004 bundles P/N 65742 (Y-cable DB50M-Dual DB25F) and is not included in the table.

6840/6841 Motherboard Ports 1, 2 and 2-Port Serial Data Card Cabling

Motherboard Ports 1 and 2 Configuration	Customer Equipment Configuration	Required Cable Sections		
		Cable Adapter (one per port)	DCE-DTE crossover Cable (one per port)	Adapter Cable (one per port)
V.24/RS232 DCE	V.24/RS232 DTE	N/A	N/A	80113 15' DB25M-DB25F
V.24/RS232 DTE	V.24/RS232 DCE	N/A	80110 3' DB25M-DB25M or 80109 15' DB25M-DB25M	N/A

6840/6841 Motherboard Ports 1, 2 and 2-Port Serial Data Card Cabling

Motherboard Ports 1 and 2 Configuration	Customer Equipment Configuration	Required Cable Sections		
		Cable Adapter (one per port)	DCE-DTE crossover Cable (one per port)	Adapter Cable (one per port)
V.35 or V.36 DCE	V.35 or V.36 DTE	1152-10021 DB25M-DB25F	N/A	92104 7' DB25M-M34F
V.35 or V.36 DTE	V.35 or V.36 DCE	1152-10021 DB25M-DB25F	51177 1' DB25M-DB25F	91917 7' DB25M-M34M
V.11/X.21 DCE	V.11/X.21 DTE	1152-10022 DB25M-DB25F	N/A	92089 7' DB25M-DB15F
V.11/X.21 DTE	V.11/X.21 DCE	1152-10022 DB25M-DB25F	51176 1' DB25M-DB25F	91918 7' DB25M-DB15M
2-Port Serial Data Card				
V.24/RS232 DCE	V.24/RS232 DTE	N/A	N/A	80113 15' DB25M-DB25F
V.24/RS232 DTE	V.24/RS232 DCE	N/A	80110 3' DB25M-DB25M or 80109 15' DB25M-DB25M	N/A

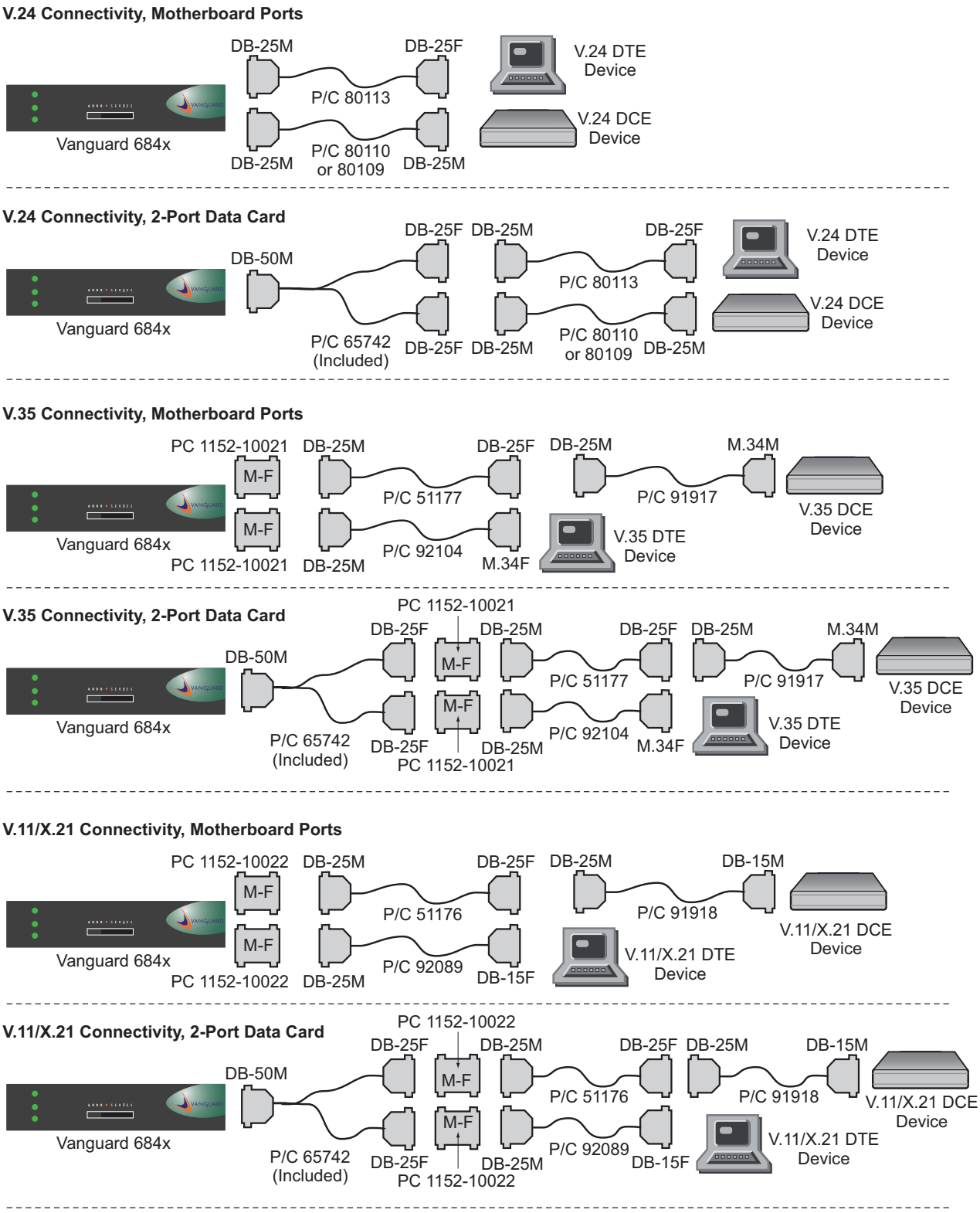

Figure 3-6. Cable Diagram V.24, V.35, and V.11/X.21

Vanguard 6840/6841 V.11/X.21 Cable Adapter

Listed below is the pinout of the Cable Adapter that enables the use of existing V.11/X.21 serial cables on Ports 1 and 2 of the 6840/6841 platform. The part number is 1152-10022

Note

This adapter is also intended to be used in conjunction with the Y-Cable for the 2-Port Serial Data Card.

V.11/X.21 Cable Adapter Pinout

P1	*P2*
1	1
2	2
3	3
4	NC
5	5
6	6
7	7
8	8
9	9
10	20
11	6
12	22
13	13
14	NC
15	15
16	16
17	17
18	18
19	14
20	NC
21	21
22	NC
23	23
24	24
25	25

Vanguard 6840/6841 V.35/V.36 Cable Adapter

Listed below is the pinout of the Cable Adapter that enables the use of existing V.35 and V.36 serial cables on Ports 1 and 2 of the 6840/6841 platform. The part number is 1152-10021

Note

This adapter is also intended to be used in conjunction with the Y-Cable for the 2-Port Serial Data Card.

V.35/V.36 Cable Adapter Pinout

P1	P2
1	1
2	2
3	3
4	NC
5	5
6	6
7	7
8	8
9	18
10	10
11	11
12	22
13	13
14	NC
15	15
16	16
17	17
18	NC
19	14
20	20
21	21
22	NC
23	23
24	24
25	25

Special Cables

The special cables required to emulate a high speed DTE interface V.11/X.21, V.35, or V.36 on any 6840/6841 Universal Serial Port are listed in the table below for ports 1 and 2 as well as any 2-Port Serial Data Card:

Vanguard 6840/6841 Special Cables

Part Number	Description
51176	1’ V.11/X.21 DCE–DTE Adapter Cable
51177	1’ V.35 or V.36 DCE–DTE Adapter Cable

Vanguard 6840/6841 Adapter Cables

Part Number Modified from Product Code	Description
80113	15’ DB25M–DB25F Straight Cable, V.24/RS232
92089	7’ DB25M–DB15F Custom Cable, V.11/X.21
91918	7’ DB25M–DB15M Custom Cable, V.11/X.21
92104	7’ DB25M–V.35F Custom Cable, V.35 or V.36
91917	7’ DB25M–M34M Custom Cable, V.35 or V.36

These tables describe the DB25 connector pinouts for Ports 1, 2, and any 2-Port Serial Data Card ports:

DB25 V.24 Pinouts (DCE)

Pin	ITU Circuit	I/O	Signal Name
1	---	-----	Protective Ground
2	103	INPUT	Transmitted data
3	104	OUTPUT	Received data
4	105	INPUT	Request To Send
5	106	OUTPUT	Clear To Send
6	107	OUTPUT	Data Set Ready
7	102	-----	Signal Ground
8	109	OUTPUT	Data Carrier Detect
14	---	INPUT	Data Restraint Out
15	114	OUTPUT	Transmitted Clock
16	---	-----	N/C
17	115	OUTPUT	Received Clock
18	---	INPUT	External Rx Clock
20	108/2	INPUT	Data Terminal Ready
21	---	-----	N/C
22	125	OUTPUT	Ring Indicator
24	113	INPUT	External Tx Clock
25	142	OUTPUT	Test Indicator

DB25 V.35/V.36 Pinouts

Note

For ports 1, 2, and any 2-Port Serial Data Card after the 1152-10021 Cable Adapter is installed.

Pin	Signal	DCE Position
1	GND	-------
2	TXD A	IN
3	RXD A	OUT
4	RTS	IN
5	CTS	OUT
6	DSR	OUT
7	SIG GND	-------
8	DCD	OUT
14	TXD B	IN
15	TXC A	OUT
16	RXD B	OUT
17	RXC A	OUT
18	RXC B	OUT
20	DTR	IN
21	TXC B	OUT
22	ETXC B	IN
24	ETXC A	IN
25 (V.36 only)	TM	NC

DB25 V.11/X.21 Pinouts

Note

For ports 1, 2, and any 2-Port Serial Data Card after the 1152-10022 Cable Adapter is installed.

Pin	Signal	DCE Position
1	GND	-------
2	TXD A	IN
3	RXD A	OUT
4	RTS A	IN
6	DCD B	OUT
7	SIG GND	-------
8	DCD A	OUT
14	TXD B	IN
15	TXC A	OUT

DB25 V.11/X.21 Pinouts *(continued)*

Note

For ports 1, 2, and any 2-Port Serial Data Card after the 1152-10022 Cable Adapter is installed.

Pin	Signal	DCE Position
16	RXD B	OUT
20	RTS B	IN
21	TXC B	OUT
22	ETXC B	IN
24	ETXC A	IN

Ports 3 and 4

These ports have RJ-45 connectors. Use Port 4 as the CTP because Port 3 cannot be used for coldloading software to the node. Figure 3-7 shows the pin numbers for ports 3 and 4.

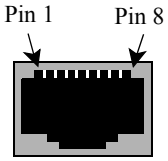

Figure 3-7. Ports 3/4 Pin Numbers

This table shows the pinouts for RJ-45 connectors for Ports 3 and 4:

Pin Number	Port 3/Port 4 (CTP)	
	Signal	DCE
1	RTS	Input
2	DTR	Input
3	RXD	Output
4	DCD	Output
5	GND	-------
6	TXD	Input
7	DSR	Output
8	CTS	Output

Note

Use Ports 3 and 4 only with low speed asynchronous protocols. Running asynchronous protocols at speeds greater than 19.2 kbps may degrade node performance.

Port 23 and Port 24

This table shows the pinouts for the RJ45 Ethernet connector for Ports 23 and 24:

Pin	Signal
1	Transmit Positive
2	Transmit Negative
3	Receive Data Positive
4	Not Used
5	Not Used
6	Receive Data Negative
7	Not Used
8	Not Used

Cabling Daughtercards

For instructions on cabling your standard Vanguard Daughtercards, refer to the *Vanguard Daughtercard Installation Guide* (Part Number T0020).

Cabling 2-Port Serial Card

The 2-Port Serial Card comes with one Y-Cable Adapter as shown in Figure 3-8. They allow the connector on the rear of the 2-Port Serial Card to support two ports.

■Note

The Cable Adapter (Figure 3-6) is required on all Universal Serial Ports (motherboard and 2-Port Serial Data Card) to use existing Vanguard Networks Adapter Cables when running high-speed V.11/X.21, V.35, or V.36.

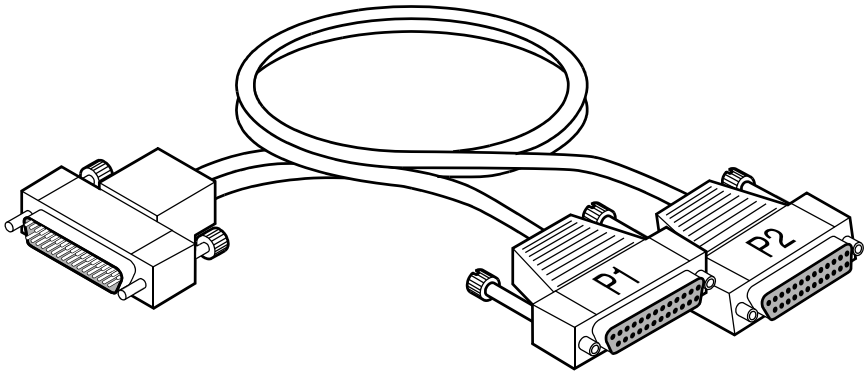

Figure 3-8. 2-Port Serial Card Y-Cable (P/N 65742)

Modifying Your Vanguard 6840/6841

Introduction

You can modify your Vanguard 6840/6841 by adding or replacing components on the motherboard. In addition, if you have a Vanguard 6840/6841, you can add and replace daughtercards. This section explains how to make these modifications.

Daughtercards

You can install up to four Vanguard Networks Daughtercards in the Vanguard 6840/6841.

- For information about installing a standard Vanguard Daughtercard, refer to the sample daughtercard installation illustration in Figure 3-9 or the Vanguard *Daughtercard Installation Guide* (Part Number T0020).

When installing a Vanguard Daughtercard into a 6840/6841, you must use the shorter two-sided header. The taller header is used with other Vanguard units.

Remove a Daughtercard

1. Locate the Daughtercard you want to remove and loosen the captive screws that are holding it to the back panel.
2. Loosen and remove the two mounting screws.
3. Carefully lift out the daughtercard.

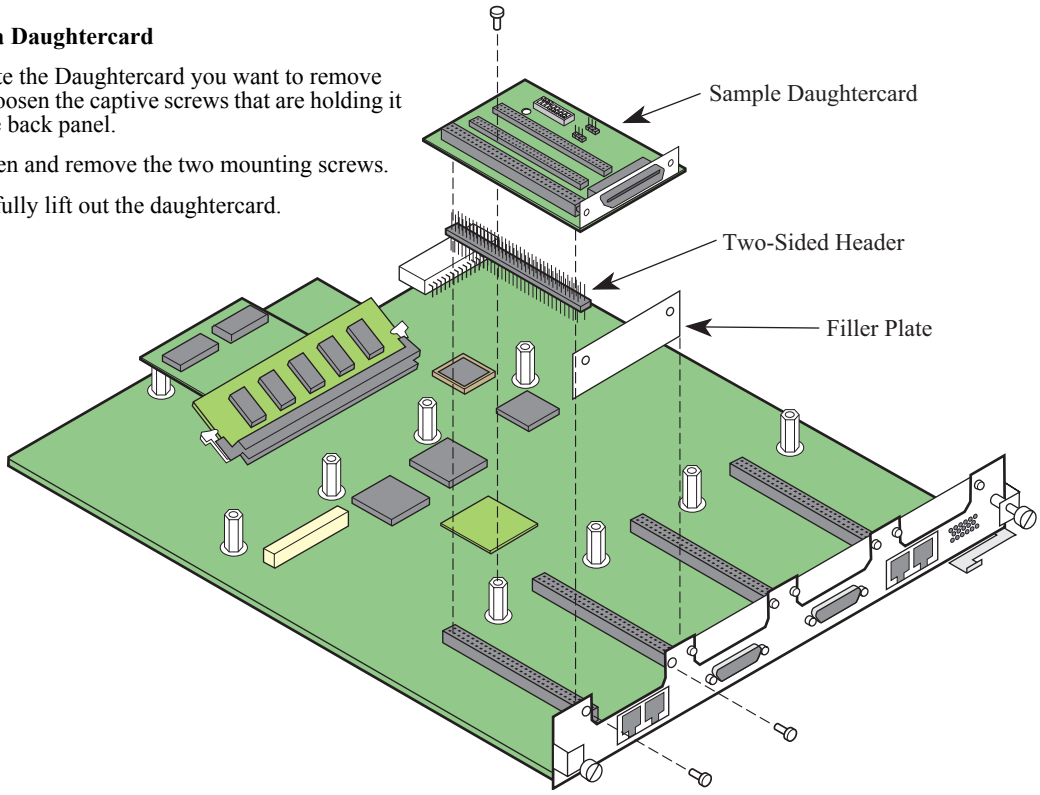

Install a Daughtercard

1. Locate the slot where you want to install the Daughtercard and remove the filler panel by loosening the captive screws.
2. Carefully position the Daughtercard over the connector. Press down firmly so the daughtercard connector seats properly with the motherboard connector.
3. Secure the Daughtercard with the two mounting screws and the two captive screws on the back panel.

Figure 3-9. Sample Daughtercard Installation

Accessing the Motherboard

Introduction

This section explains how to access the motherboard for the Vanguard 6840/6841. It also identifies the location of the key motherboard components.

Before replacing DIMMs, batteries, or daughtercards, you must access the Vanguard 6840/6841 motherboard.

Instructions for the 6840/6841

Figure 3-10 shows how to remove and install the Vanguard 6840/6841 motherboard. Figure 3-11 shows the location of the components on the motherboard.

Warning

To prevent injury and damage to the equipment, power down the unit and disconnect the power cord before you remove or install the motherboard.

Avertissement

Pour éviter toute blessure ou endommagement de l'équipement, éteignez l'unité et déconnectez le cordon d'alimentation avant d'enlever ou d'installer la carte mère.

Warnung

Um persönliche Verletzungen und Schäden am Gerät zu verhindern, schalten Sie das Gerät ab, und ziehen Sie den Netzstecker aus, bevor Sie die Hauptplatine entfernen oder installieren.

Caution

Use care when handling and placing the motherboard on a surface. There are components on the bottom of the motherboard that can be damaged.

Caution

Some components used in the 6840/6841 are sensitive to static electric discharges; static electric discharges can cause damage to internal components. Use proper handling and grounding precautions whenever handling cards and components.

Mise en Garde

Certains composants du 6840/6841 sont sensibles aux décharges électrostatiques qui peuvent les endommager. Prenez les dispositions et précautions de mise à la terre nécessaires lors de la manipulation de cartes et de composants.

Vorsicht

Einige im 6840/6841 verwendeten Komponenten sollten keinen elektrostatischen Entladungen ausgesetzt werden, durch die interne Bauteile beschädigt werden können. Wenden Sie die entsprechenden Maßnahmen zur Erdung und zum Schutz vor statischen Ladungen bei der Handhabung von Karten und Komponenten an.

Caution

When inserting the motherboard, remove the Compact Flash Memory Card and be sure the screws are tight. If they are loose, the motherboard could become unseated under the weight of the attached cables.

Caution

When handling any components or cards, use ESD protection.

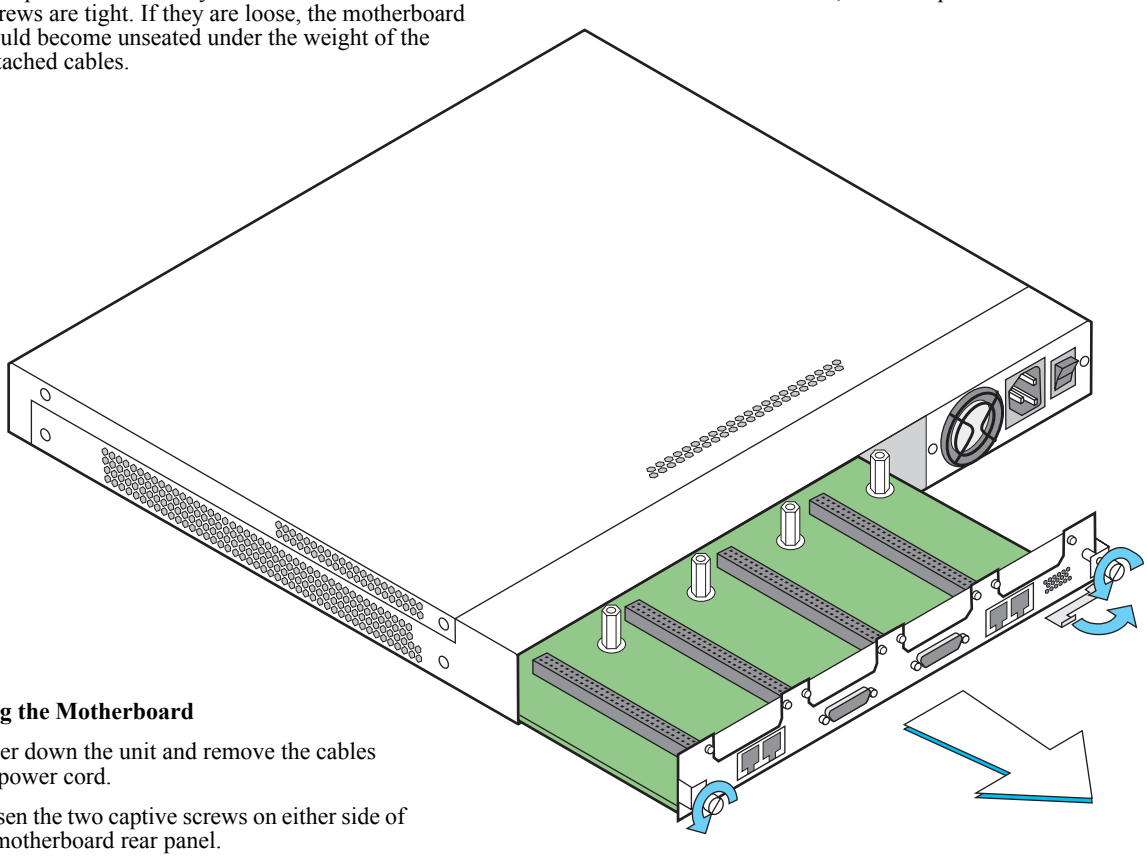

Removing the Motherboard

1. Power down the unit and remove the cables and power cord.
2. Loosen the two captive screws on either side of the motherboard rear panel.
3. Use the ejector lever to carefully slide out the motherboard.
4. Place the motherboard on a clean flat surface.

Installing the Motherboard

1. Carefully slide the motherboard into the card guides within the opening. Push the motherboard into the enclosure (make sure lever is flat against the back panel). Make sure the power connector seats properly by pressing firmly on the thumbscrews.
2. Hand tighten the captive screws on both sides of the rear panel. *Be sure the screws are snug*.
3. Reconnect the cables and power cord and power up the unit.

Figure 3-10. Vanguard 6840/6841 Motherboard Removal and Replacement

Warning

There are no serviceable components inside the chassis. Removal or installation of the enclosure cover may result in damage to the Compact Flash Memory Card slot.

Warning

Remove Compact Flash Memory Card before installing motherboard.

Motherboard Components

Figure 3-11 shows the components on a Vanguard 6840/6841 motherboard.

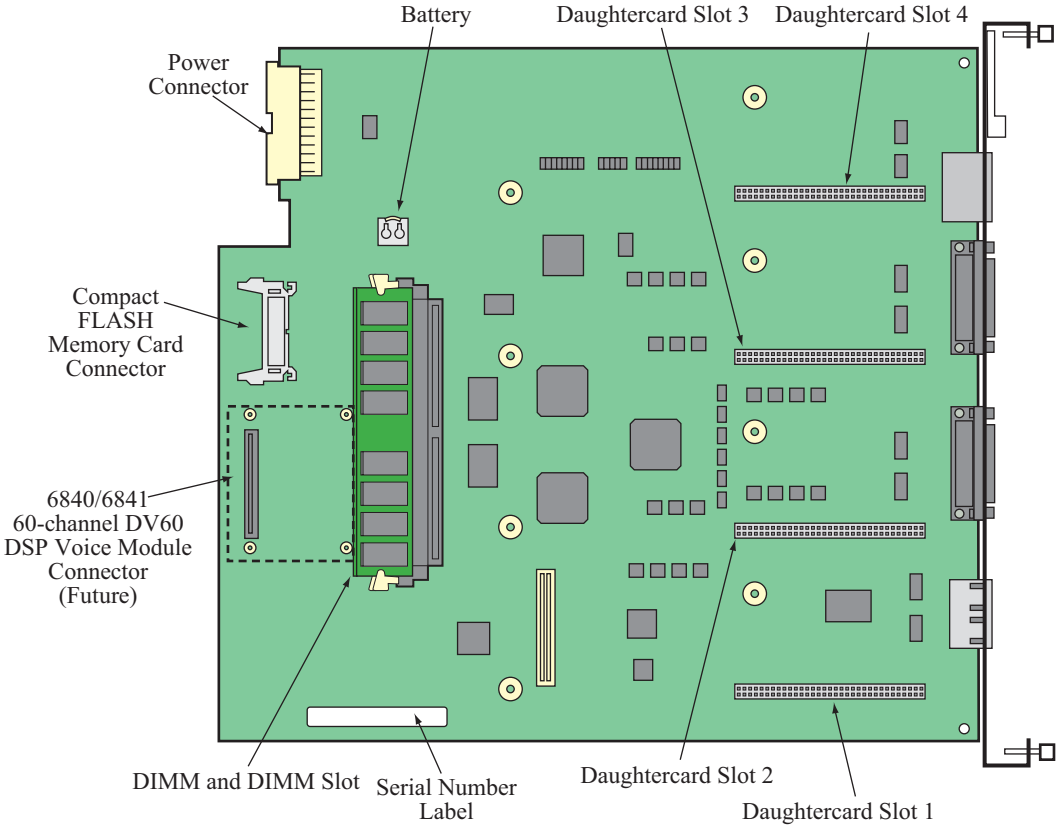

Figure 3-11. Location of Motherboard Components

DIMM and Compact Flash

Introduction

The appropriate DIMM should have been installed on the motherboard at the factory. If not, you can install the components.

This section explains how to:

- Add and remove DIMM.
- Add and remove Compact Flash.

For instructions for removing the motherboard, refer to the "Accessing the Motherboard" section on page 3-20.

Adding or Removing SDRAM DIMM

Figure 3-12 shows how to add or remove a SDRAM (synchronous DRAM) DIMM. Refer to Figure 3-11 for the location of the SDRAM DIMM slot.

For instructions for removing the motherboard, refer to the "Accessing the Motherboard" section on page 3-20.

Caution

Some components used in the 6840/6841 are sensitive to static electric discharges; static electric discharges can cause damage to internal components. Use proper handling and grounding precautions whenever handling cards and components.

Mise en Garde

Certains composants du 6840/6841 sont sensibles aux décharges électrostatiques qui peuvent les endommager. Prenez les dispositions et précautions de mise à la terre nécessaires lors de la manipulation de cartes et de composants.

Vorsicht

Einige im 6840/6841 verwendeten Komponenten sollten keinen elektrostatischen Entladungen ausgesetzt werden, durch die interne Bauteile beschädigt werden können. Wenden Sie die entsprechenden Maßnahmen zur Erdung und zum Schutz vor statischen Ladungen bei der Handhabung von Karten und Komponenten an.

Note

The location of the SDRAM DIMM is indicated on the motherboard as shown in Figure 3-11.

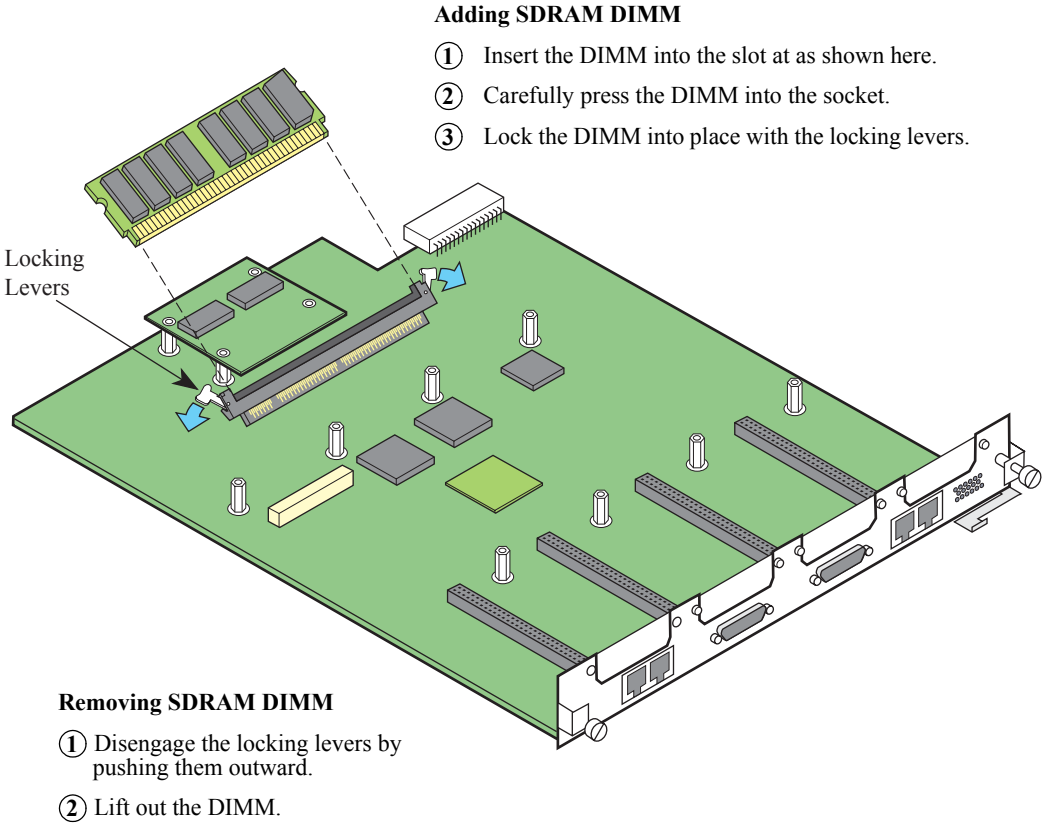

Adding SDRAM DIMM

1. Insert the DIMM into the slot at as shown here.
2. Carefully press the DIMM into the socket.
3. Lock the DIMM into place with the locking levers.

Removing SDRAM DIMM

1. Disengage the locking levers by pushing them outward.
2. Lift out the DIMM.

Figure 3-12. SDRAM DIMM Installation/Replacement

Adding/Removing Compact Flash Memory Card

The 6840/6841 comes with a 256 Megabyte Compact Flash Memory Card which is expandable to 1024 Megabytes. The Compact Flash Memory Card is used to store Operating Software and Configuration Memory (CMEM). The Compact Flash Memory Card allows the storage of a current and alternate software image and a current and alternate CMEM.

Figure 3-13 shows how to add or remove a Compact Flash Memory Card for the Vanguard 6840/6841.

Caution

Some components used in the 6840/6841 are sensitive to static electric discharges; static electric discharges can cause damage to internal components. Use proper handling and grounding precautions whenever handling cards and components.

Mise en Garde

Certains composants du 6840/6841 sont sensibles aux décharges électrostatiques qui peuvent les endommager. Prenez les dispositions et précautions de mise à la terre nécessaires lors de la manipulation de cartes et de composants.

Vorsicht

Einige im 6840/6841 verwendeten Komponenten sollten keinen elektrostatischen Entladungen ausgesetzt werden, durch die interne Bauteile beschädigt werden können. Wenden Sie die entsprechenden Maßnahmen zur Erdung und zum Schutz vor statischen Ladungen bei der Handhabung von Karten und Komponenten an.

Note

The location of the Compact Flash is indicated on the motherboard as shown in Figure 3-11.

To Install the Compact Flash Memory Card:

Insert the Compact Flash into the slot located at the front panel. Push Compact Flash into slot until locks into place.

To Remove the Compact Flash Memory Card:

Push ejector button on the left side of the Compact Flash Memory Card slot.

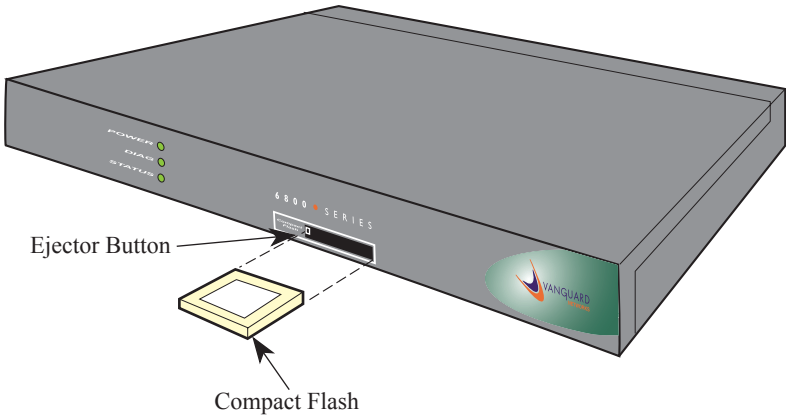

Figure 3-13. Compact Flash Installation/Removal

Installing/Removing the Lithium Battery

Introduction

Vanguard 6840/6841 uses a lithium battery on the motherboard to maintain the node's realtime clock. The battery is not used to store the configuration memory.

This section explains how to replace the battery.

Warning

Only qualified service personnel should perform the procedure described in this section. If the battery is installed incorrectly, it could explode after the Vanguard product is powered up, damaging the unit.

Avertissement

Seules des personnes qualifiées peuvent mettre en pratique les procédures décrites dans cette section. Si la batterie n'est pas correctement installée, elle risque d'exploser après la mise en marche du produit Vanguard et d'endommager l'unité.

Warnung

Die in diesem Abschnitt aufgeführten Vorgänge sollten ausschließlich von qualifiziertem Servicepersonal durchgeführt werden. Wenn die Batterie unsachgemäß installiert wird, kann sie nach dem Einschalten des Vanguard-Produkts explodieren und das Gerät beschädigen.

Note

After installing the battery, set the Vanguard 6840/6841's date and time. This is done via the CTP in the Update System Parameter menu.

Battery Type

Replace the lithium battery with lithium coin cell type CR1225 or its equivalent. These can be obtained where watch batteries are sold.

Battery Disposal

Dispose of the battery in compliance with applicable local regulations.

Routine Battery Replacement

The lithium battery should be replaced every two years. Follow the instructions in Figure 3-14 to replace the battery.

Before Removing/ Installing the Battery

Before you remove or install the battery, you must access the Vanguard 6840/6841 motherboard as described in the "Accessing the Motherboard" section on page 3-20.

Once you can see the motherboard, locate the battery as shown in Figure 3-14.

Removing/ Installing the Battery

Figure 3-14 shows how to install and replace the battery.

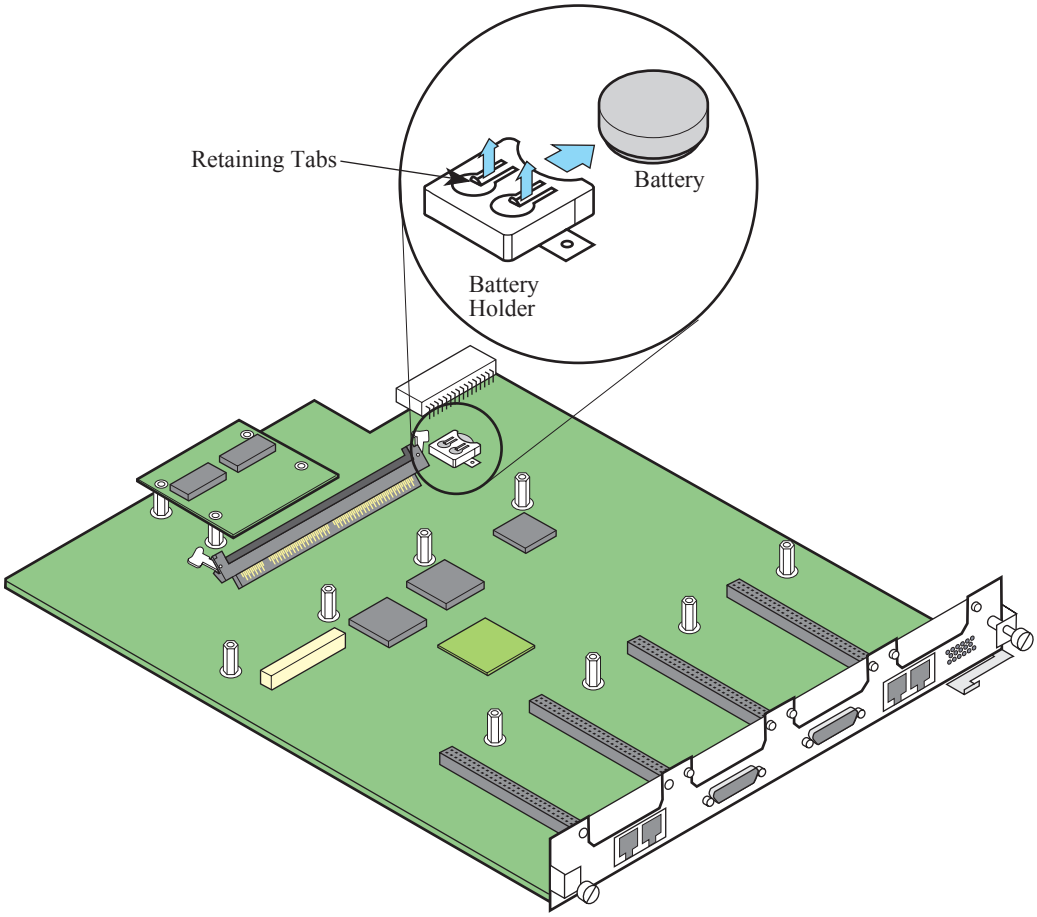

To remove the battery

Using your fingers, push the retaining tabs upwards and pry the battery out of the holder.

To install the battery

Place the battery in the holder with the positive (+) side up, and slide the battery into place.

Note: When done, replace the motherboard as explained in the "Accessing the Motherboard" section on page 3-20.

Figure 3-14. Replacing the Battery

Warning

Remove Compact Flash Memory Card before installing motherboard.

Chapter 4
Powering Up Your Vanguard 6840/6841

Overview

Introduction

This chapter explains how to:

- Power up your Vanguard 6840/6841.
- Ensure that the unit powered up correctly and is up and running by reading the front panel LEDs.
- Load the Vanguard 6840/6841 software.

Power Up Procedure

Introduction

This section explains how to power up the Vanguard 6840/6841.

Procedure

Follow these steps to power up your Vanguard 6840/6841.

Step	Action
1	Check that all the cards are fully inserted and secure.
2	Make sure that the AC power cord is plugged in.
3	Set the power switch to On.
4	Check the front panel LED.

To power down the Vanguard 6840/6841, simply set the power switch to Off.

LEDs

Figure 4-1 shows the Vanguard 6840/6841 LEDs and the table that follows describes them.

Figure 4-1. Vanguard 6840/6841 LEDs

LED	Description	6840/6841 System State			
		Initial PowerON	Diagnostics Executing	SW Loading	Operational Status
Power	Power OK	On	ON	On	On
Diag	Diagnostics and SW Loading	On	On	Blink	Off
Status	System Active	On	Off	Off	On

Warm and Cold Boot

Introduction

The 6840/6841 will generate a different display depending on whether the node was Powered-on or Cold Booted as compared to a Warm Boot.

Cold Boot

Figure 4-2 illustrates the typical display of a 6840/6841 during a Power-on or Cold Boot.

■Note

Power-on diagnostics may vary between nodes depending on daughtercard configuration.

```
--------------------------
 Vanguard 6800 Bootprom
   Revision: 1.06
   Date: Mar 11 2007
--------------------------
Current CMEM requested.
Current image requested.
Current image ID:
   V6.5.P30E_@P1ST01_6840
   05 Sep 2007
Alternate image ID:
   V6.5.P30B_@FIFS_6840
   21 Jun 2007

Starting current image ...
Loading diagnostics software ...

Executing V684x STARTUP Diagnostics (Rev: 1.0)...

SDRAM Memory Test (0F000000--10000000) <<-PASSED->>
Testing SRAM <<-PASSED->>
Ethernet Test: (Port 23, 100 Mbps, Full_duplex, FPGA loopback): <<-PASSED-
>>
Ethernet Test: (Port 24, 100 Mbps, Full_duplex, FPGA loopback): <<-PASSED-
>>
VRDC Port 07 (T1): <<---NA--->>
VRDC Port 10 (T1): <<---NA--->>
VRDC Port 13 (T1): <<---NA--->>
VRDC Port 16 (SDC2-DCE): <<---NA--->>
Modem Port 07 (T1): <<---NA--->>
Modem Port 10 (T1): <<---NA--->>
Modem Port 13 (T1): <<---NA--->>
Modem Port 16 (SDC2-DCE): <<---NA--->>
UART Port 01 (UDIM-DCE): <<-PASSED->>
UART Port 02 (UDIM-DCE): <<-PASSED->>
UART Port 03 (232-DCE): <<-PASSED->>
UART Port 07 (T1): <<---NA--->>
UART Port 10 (T1): <<---NA--->>
UART Port 13 (T1): <<---NA--->>
UART Port 16 (SDC2-DCE): <<-PASSED->>
UART Port 17 (SDC2-DCE): <<-PASSED->>
HDLC Port 01 (UDIM-DCE): <<-PASSED->>
HDLC Port 02 (UDIM-DCE): <<-PASSED->>
HDLC Port 03 (232-DCE): <<---NA--->>
HDLC Port 07 (T1): <<-PASSED->>
HDLC Port 10 (T1): <<-PASSED->>
HDLC Port 13 (T1): <<-PASSED->>
HDLC Port 16 (SDC2-DCE): <<-PASSED->>
HDLC Port 17 (SDC2-DCE): <<-PASSED->>
Clock Measurement: <<-PASSED->>
Timers:          <<-PASSED->>
IDPROM Test:     <<-PASSED->>
Environmental Monitor: <<-PASSED->>
Encryption: <<-PASSED->>
Exiting V684x STARTUP Diagnostics...

--------------------------
 Vanguard 6800 Bootprom
   Revision: 1.06
   Date: Mar 11 2007
--------------------------
Current CMEM requested.
Current image requested.

Current image ID:
   V6.5.P30E_@P1ST01_6840
   05 Sep 2007
Alternate image ID:
   V6.5.P30B_@FIFS_6840
   21 Jun 2007

Starting current image ...
Loading system software ...

OK
```

Figure 4-2. Typical Power-on or Cold Boot Display

Warm Boot

Figure 4-3 illustrates the typical display of a 6840/6841 warm boot.

```
Boot the Node


WARNING: Booting the node will cause all current calls to be abnormally
         disconnected.  This operation may result in data loss and
         a disruption of network user sessions.


Proceee (y/n): y


        Node Boot is in progress - please wait...





--------------------------
 Vanguard 6800 Bootprom
   Revision: 1.06
   Date: Mar 11 2007
--------------------------

Current CMEM requested.
Current image requested.

Current image ID:
   V6.5.P30E_@P1ST01_6840
   05 Sep 2007
Alternate image ID:
   V6.5.P30B_@FIFS_6840
   21 Jun 2007


Starting current image ...
Loading system software ...

OK
```

Figure 4-3. Typical Warm Boot Display

Caution

During Boot PROM upgrade if you reset the node after “Erasing Flash”, the node will freeze and must be returned to Vanguard Networks for repair.

Loading the Software

Introduction

This section briefly describes how to load the software into your Vanguard 6840/6841.

Note

After the software has been loaded, refer to the appropriate user document to configure and use the different software options.

Operating Software

The operating software is compressed in Flash and loaded into SDRAM for execution. There are a variety of operating software feature sets available for the Vanguard 6840/6841.

- See the *Software Installation and Download Guide* (Part Number T0028) for information on installing the operating software.

Optional Software

You can obtain Applications Ware Packages that can be tailored to your specific needs. The Applications Ware licenses available for Vanguard products are:

- IP+
- SNA+
- Multi-Service

Note

For details about the contents of the license upgrade packages and how they can be obtained, refer to the latest *Software Release Notice*. A license refers to both a legal document that allows a customer to use features and to the software that contains the features.

Appendix A
Specifications

Overview

Introduction

This appendix describes the physical and electrical specifications for the Vanguard 6840/6841and.

Dimensions

Figure A-1 shows the exterior dimensions of the Vanguard 6840/6841.

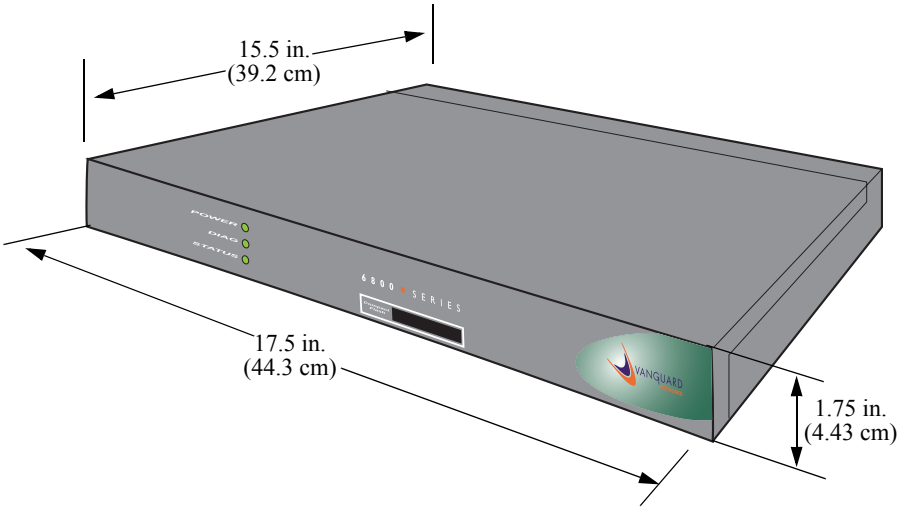

Figure A-1. Vanguard 6840/6841 Exterior Dimensions

Weight

The Vanguard 6840/6841/ weights are listed below:

Vanguard	*Weight*
6840/6841 with four daughtercards installed.	12.05 lbs

Environment

Operating temperature: 32° to 98° F (0° to 40° C)

Storage temperature: -40° to 158° F (-40° to 70° C)

Relative humidity: 5% to 90% (non-condensing)

Power Requirements

Input voltage 100 to 240 Vac

Input frequency: 50 to 60 Hz

Input current:

- 6840/6841: 1.3 to 0.6 A

Maximum input power consumption:

- 6840/6841: 90 W

Appendix B
Software License and Regulatory Information

Overview

Introduction

This appendix provides information about the following:

- FCC Part 68 and Telephone Company Procedures and Requirements
- Product Declarations and Regulatory Information

FCC Part 68 and Telephone Company Procedures and Requirements for DSU, T1, and ISDN Interfaces

Before You Begin

Before a Vanguard 6840/6841 can be connected to the network, you must do the following:

- Provide the local telephone company with the equipment's registration number
- Order the proper connections

How to Order Connections

To order the proper connections, provide the telephone company with the following information:

- Interface type
- Required USOC jack connector number
- Service code
- Facility interface codes

Interface Type	*USOC Jack Connector*	*Service Code*	*Facility Interface Code*
56-kbps digital interface	RJ48S	6.0F	04DU5-56
ISDN U Interface	RJ49C	6.0Y	02lS5
ISDN S/T Interface	--------	6.0F	02lS5
Fractional T1 Interface	RJ48C	6.0F	04DU9-BN 04DU9-2SN

Troubleshooting Your Connection

If any of your equipment is not operating correctly, immediately remove it from the telephone line before damaging the network. If the telephone company is aware of the problem, they may temporarily disconnect your service. Whenever possible, the telephone company notifies you in advance of the disconnection.

If advance notice is not feasible, you are notified as soon as possible. Once notified, you can correct the problem. If necessary, it is your right to file a complaint with the FCC.

Customer-Provided Telephone Equipment

FCC regulations and telephone company procedures prohibit connection of customer-provided equipment to telephone company-provided coin service (central office-implemented systems). Connection to party lines is subject to state tariffs.

Occasionally, the telephone company may make changes in their equipment, operations, or procedures. If these changes can affect your equipment or service, the telephone company provides written notice so that you can make the necessary changes to maintain uninterrupted service.

Contact your telephone company if you have any questions about your telephone line.

In some circumstances, the telephone company may ask you for information about the equipment that is connected to the telephone line. Within the United States (at the request of the telephone company), you should provide your equipment's FCC registration number. This number is located on the unit's label on the bottom of the unit.

Product Declarations and Regulatory Information

The following sections provide information about standards compliance, safety statements, and ISDN Type Approvals.

Warnings And Cautions

The following special notices apply to all equipment handling procedures in this installation guide.

Warning

Ports capable of connecting to ports on other apparatus are defined as Safety Extra Low Voltage (SELV). To conform with EN60950, ensure that these ports are only connected to ports of the same type on other apparatus.

Avertissement

Les ports qui sont susceptibles d'être connectés à des équipements sont désignés comme TBTS. Pour garantir la conformité à la norme EN 60950, n'interconnecte ces ports qu'avec des ports du même type sur des autres matériels.

Warnung

Anschlusse, die mit anderen Geraten verbindet werden konnen, sind als SELV beschrieben. Um Konformitat mit EN 60950 zu versichern, sichern Sie es, daß diese Anschlusse nur mit den des selben Type auf anderen Geraten verbindet werden.

CE Marking

One of the marks in the following diagram appears on each of the Vanguard products that are ISDN compatible, and the statement that follows explains its significance.

CE

Figure B-1. CE Mark

This product is CE marked to indicate compliance with the following European Directives:

- 73/23/EECLow Voltage Directive (Safety)
- 1999/5/EC Radio & Telecom Terminal Equipment (R&TTE)
- 89/336/EECEMC Directive

Copies of the full Declaration of Conformity are available at the following URL:

http://www.vanguardnetworks.com/

Declarations of Conformity

English

Declaration of Conformity:

Hereby, Vanguard Networks declares that this Vanguard Router is in compliance with the requirement and other relevant provisions of Directive 1999/5/EC.

Danish

Konformitetserklæring:
Hermed erklærer VanguardMS at indestående Vanguard Router er i overensstemmelse med de grundlæggende krav og de relevante punkter i direktiv 1999/5/EF.

Dutch

Verklaring van overeenstemming:

Hierbij verklaart VanguardMS dat diens Vanguard Router voldoet aan de basisvereisten en andere relevante voorwaarden van EG-richtlijn 1999/5/EG.

Finnish

Vaatimustenmukaisuusvakuutus:

VanguardMS vakuuttaa täten, että Vanguard Router on direktiivin 1999/5/EC keskeisten vaatimusten ja sen muiden tätä koskevien säännösten mukainen

French

Déclaration de conformité :

Par la présente, VanguardMS déclare que ce routeur Vanguard est conforme aux conditions essentielles et à toute autre modalité pertinente de la Directive 1999/5/CE.

German

Konformitätserklärung:

Hiermit erklärt VanguardMS dass der Vanguard Router die grundlegenden Anforderungen und sonstige maßgebliche Bestimmungen der Richtlinie 1999/5/EG erfüllt.

Greek

Δήλωση Συμμόρφωσης:
Δια του παρόντος, η εταιρεία VanguardMS δηλώνει ότι η παρούσα συσκευή (δρομολογητής) Vanguard Router πληροί τις βασικές απαιτήσεις και άλλες βασικές προϋποθέσεις της Οδηγίας 1999/5/ΕΚ.

Italian

Dichiarazione di conformità:
Con la presente VanguardMS dichiara che il router Vanguard soddisfa i requisiti essenziali e le altre disposizioni pertinenti della direttiva 1999/5/CE.

Portuguese

Declaração de Conformidade:
Através da presente, a VanguardMS declara que este encaminhador Vanguard se encontra em conformidade com os requisitos essenciais e outras disposições relevantes da Directiva 1999/5/CE.

Spanish

Declaración de conformidad:
Por la presente declaración, VanguardMS declara que este encaminador Vanguard cumple los requisitos esenciales y otras cláusulas importantes de la directiva 1999/5/CE.

Swedish

Överensstämmelseförklaring:
VanguardMS förklarar härmed att denna Vanguardrouter överensstämmer med de väsentliga kraven och övriga relevanta stadganden i direktiv 1999/5/EG.

Industry Canada

The following information includes the Industry Canada statement regarding ISDN and T1 equipment use.

The Industry Canada label identifies certified equipment. This certification means that the equipment meets certain telecommunications network protective, operational, and safety requirements. The Department does not guarantee the equipment will operate to the user's satisfaction.

Before installing this equipment, users should ensure that it is permissible to be connected to the facilities of the local telecommunications company. The equipment must also be installed using an acceptable method of connection. In some cases, the company's inside wiring associated with a single line individual service might be extended by means of a certified connector assembly (telephone extension cord). The customer should be aware that compliance with the above conditions might not prevent degradation of service in some situations.

Repairs to certified equipment should be made by an authorized Canadian maintenance facility designated by the supplier. Any repairs or alterations made by the user to this equipment, or equipment malfunctions, could give the telecommunications company cause to request the user to disconnect the equipment.

Users should ensure for their own protection that the electrical ground connections of the power utility, telephone lines, and internal metallic water pipe system, if present, are connected together. This precaution can be particularly important in rural areas.

Caution

Users must not attempt to make such connection themselves, but must contact the appropriate electric inspection authority, or electrician, as appropriate.

Mise en Garde

Les utilisateurs ne doivent pas établir de telles connexions eux-mêmes. Ils doivent contacter une personne compétente ou un électricien.

Vorsicht

Benutzer sollten nicht versuchen, diese Verbindung selbst herzustellen, sondern dazu die zuständige Aufsichtsbehörde für Elektroinstallationen bzw. einen Elektroinstallateur kontaktieren.

Notification of Canadian Requirements

This digital apparatus does not exceed the Class A limits for radio noise emissions from digital apparatus as set out in the Radio Interference Regulations of the Canadian Department of Communications.

Le présent appareil numérique n'émet pas de bruits radioélectriques dépassant les limites applicables aux appareils numériques de classe A prescrites dans le règlement sur le brouillage radioélectrique édicté par le Ministère des Communications du Canada.

Radio Frequency Interference Regulations

This equipment has been tested and found to comply with the limits for a Class A digital device, pursuant to Part 15 of the FCC Rules, CISPR 22 and EN 55022. These limits are designed to provide reasonable protection against interference in a residential installation. This equipment generates, uses, and can radiate radio frequency energy and, if not installed and used in accordance with the instructions, may cause harmful interference to radio communications. However, there is no guarantee that interference will not occur in a particular installation. If this equipment does cause harmful interference to radio or television reception, which can be determined by turning the equipment off and on, the user is encouraged to try to correct the interference by one or more of the following measures:

- Reorient or relocate the receiving antenna.
- Increase the separation between the equipment and receiver.
- Connect the equipment into an outlet on a circuit different from that to which the receiver is connected.
- Consult the dealer or an experienced radio/TV technician to help.

Changes or modifications not expressly approved by VanguardMS could void the user's authority to operate the equipment.

This Class A digital apparatus meets all requirements of the Canadian Interference-Causing Equipment Regulations.

This product was FCC certified under test conditions that included use of shielded data terminal equipment cables. Use of different cables will invalidate FCC certification and increase the risk of causing interference to radio and TV reception.

You can obtain the proper cables from VanguardMS.

Introduction

The following sections apply to U.S.A. customers only. Non-U.S.A. customers with questions or concerns regarding return procedures should contact their Vanguard Networks subsidiary or distributor.

Equipment Return Procedures

If you have questions about equipment return procedures, on-site service or unit exchange service call the Vanguard Networks Technical Support Center at (800) 544-0062 for advice and assistance.

In Case of Damage

If the equipment is damaged in transit, contact the shipper.

If you have additional concerns in case of failure, about missing parts, or to return equipment, contact your nearest Vanguard Networks representative.

For Locations	*Contact...*
Inside the United States	Vanguard Networks 25 Forbes Blvd Foxboro, MA 02035 Phone: (508) 964 6200 Fax: (508) 543 0237
Outside the United States	the nearest Vanguard Networks distributor. For a listing of our Sales and Service Offices, visit our Web site at: **http://www.vanguardnetworks.com/**

Expiration of Lease

To return equipment upon expiration of a lease agreement, contact the Vanguard Networks Support Center at (800) 544-0062 for return authorization and instructions. You will be asked to provide the following information:

- Product name and description
- Serial number
- Customer order number
- Reason for return

Factory Repair

To return equipment for factory repair, call the Vanguard Networks Technical Support Center at (800) 544-0062, for return authorization and instructions. When you call, you will be given a Return Material Authorization (RMA) control number. Mark this number clearly on the shipping container for ease of identification and faster service. The RMA control number provides a convenient tracking reference for both parties. Please have the following information available for each piece of equipment you return:

- Product name and description
- Serial number
- Failure symptoms

Packaging Guidelines for Equipment Return

Data communications equipment or parts that are to be returned to Vanguard Networks for any reason must be properly packaged to prevent damage in shipment and handling.

If the original packing material and shipping container are available, reuse these items to return equipment. If these items are not available, it is your responsibility to package the contents in a manner that protects the equipment from damage during normal shipping and handling. Responsibility for damage to equipment during transit must be resolved between you and the carrier. Vanguard Networks can provide you with specific packaging instructions upon request.

Index

Numerics

2 Port Voice FXS Daughtercard 2-9
2-Port Data Card 2-11
2-Port Serial Y-cable 3-18
56 K DSU/CSU Daughtercard 2-7

A

Add/Remove Compact Flash Memory Card 3-25
Add/Replace DIMM 3-23
Adding Components 3-19
Audience 1-vii
Avertissement 1-xi

B

Battery
  disposal 3-26
  Remove/Replace 3-26
  replacement schedule 3-27
  replacement type 3-26
Besondere Hinweise
  Beschreibung 1-xi

C

Cable Adapters 3-10
Cabling
  2-Port Serial Data Card 3-18
  daughtercards 3-18
Canadian Regulatory Requirements B-7
Compact Flash Memory Card
  add/remove 3-25
Contents
  Shipping 3-2

D

Daughtercard
  2 Port Voice FXS 2-9
  2-Port Data Card 2-11
  56 K DSU/CSU 2-7
  cabling 3-18
  compatibility 2-6
  DIM 2-7
  Dual E&M 2-10
  FT1/FE1 2-10
  ISDN BRI-ST 2-8
  ISDN BRI-U 2-7
  list 1-4
  Non Supported 1-4
  Remove/Replace 3-19
Description 1-2
DIM Daughtercard 2-7
Dual E&M Daughtercard 2-10

E

Electromagnetic Radiation
  requirements B-7
Enclosure 2-2
enclosure 2-2
Equipment return 1-1
  packaging 1-2

F

Factory repair 1-2
Fan 3-8
Features 1-3
Front Panel 1-1
FT1/FE1 Daghtercard 2-10

H

Hardware Specifications A-1
Heat 3-8
High-Speed DTE Interface 3-10

I

Installation 3-3
Installation and Replacement 3-1
Installation Instructions
  Rack Mount 3-6
  Standalone 3-5
ISDN BRI-S/T Daughtercard 2-8
ISDN BRI-U Daughtercard 2-7

L

Lease expiry 1-1
Loading Software 4-6

M

Messages spéciaux 1-x
  Important 1-x
Mise en garde 1-x
Motherboard 2-4
  components 2-4
  remove/replace 3-20
Motherboard Components 3-22

O

Operating Environment 3-4
Operating Software 4-6
Ordering Connections
    facility interface code B-2
    interface type B-2
    service code B-2
    USOC jack connector B-2
Overview 1-1

P

port numbers 2-3, 3-9
Ports
    numbers 3-9
    Rear 3-9
Power Requirements A-2
Power Up
    Cold Boot 4-3
    Warm Boot 4-5
Power Up LEDs 4-2
Power Up Sequence 4-2
Powering Up 4-1
Product Declarations B-4

R

Rack Mount Installation 3-6
Regulatory Information B-4
    Canadian requirements B-7
    Industry Canada B-7
Remove/Replace
    Battery 3-26
    components 3-19
    daughtercard 3-19
    Motherboard 3-20
Replace Battery 3-27

S

SDRAM DIMM
    add/replace 3-23
Shipping Contents 3-2
simboli speciali
    descrizione 1-xi
Software
    operating 4-6
Software Loading 4-6
Special Cables 3-10, 3-14
Special notices
    description 1-ix
Specifications A-1
Stanalone Installation 3-5
standalone installation 3-4

T

Telephone Company Procedures B-2
Temperature 3-8
Thermal Considerations 3-8
Troubleshooting
    connections B-2

U

Unpacking
    parts list 3-2

V

Vorsichtshinweis, Beschreibung 1-xi

W

Warnhinweis, Beschreibung 1-xi
WICHTIG-Hinweis, Beschreibung 1-xi